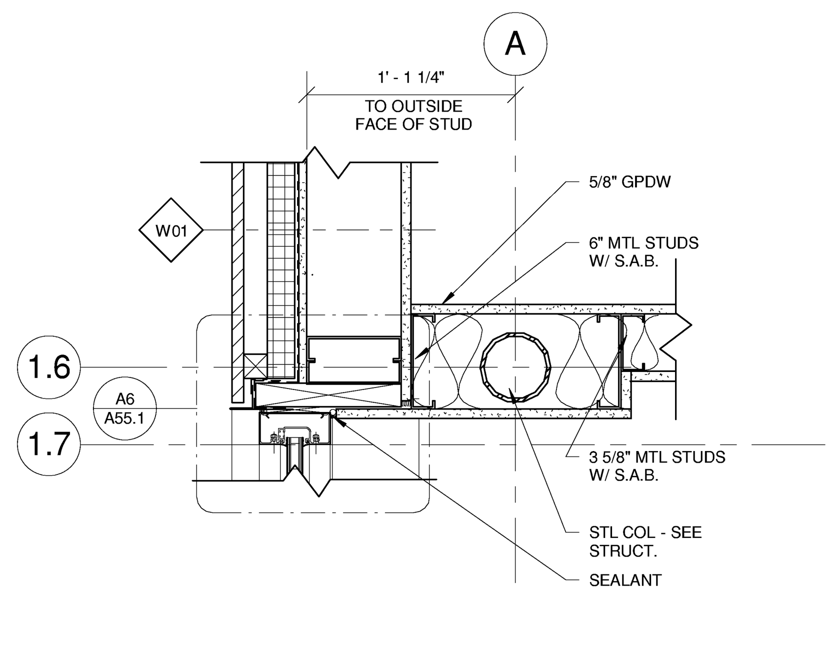

D4 PLAN DETAIL
1 1/2" = 1'-0"

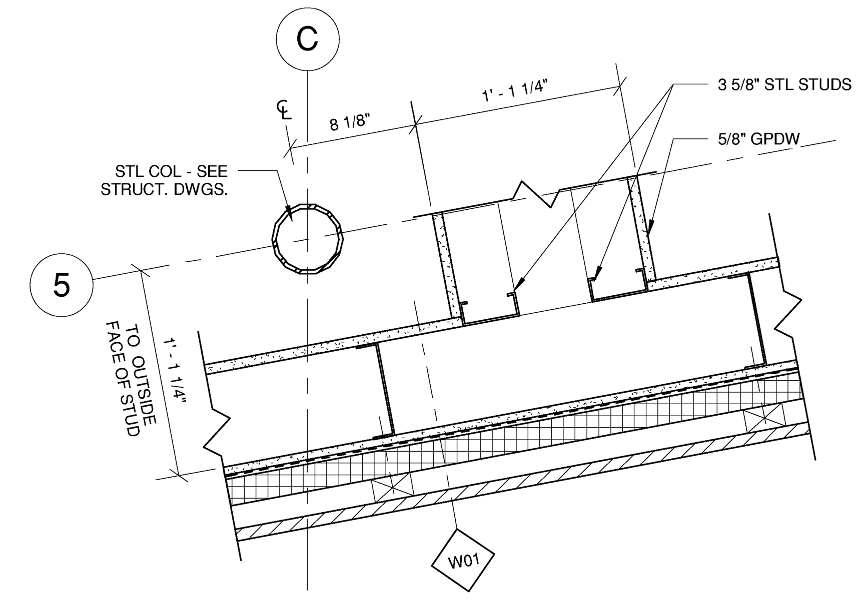

D3 PLAN DETAIL
1 1/2" = 1'-0"

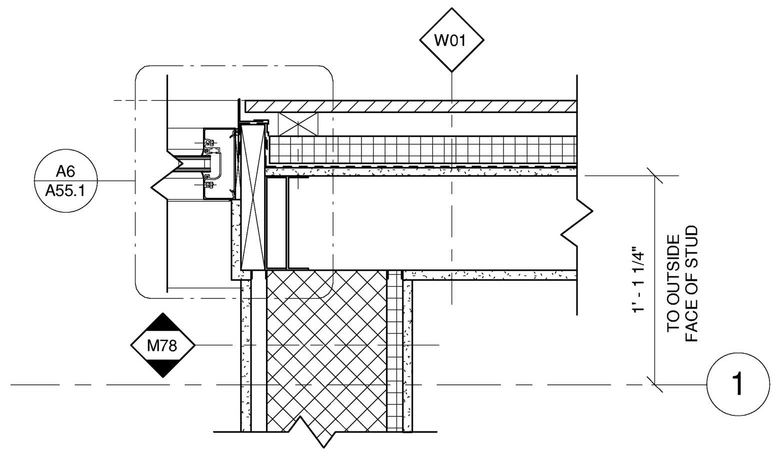

D2 PLAN DETAIL
1 1/2" = 1'-0"

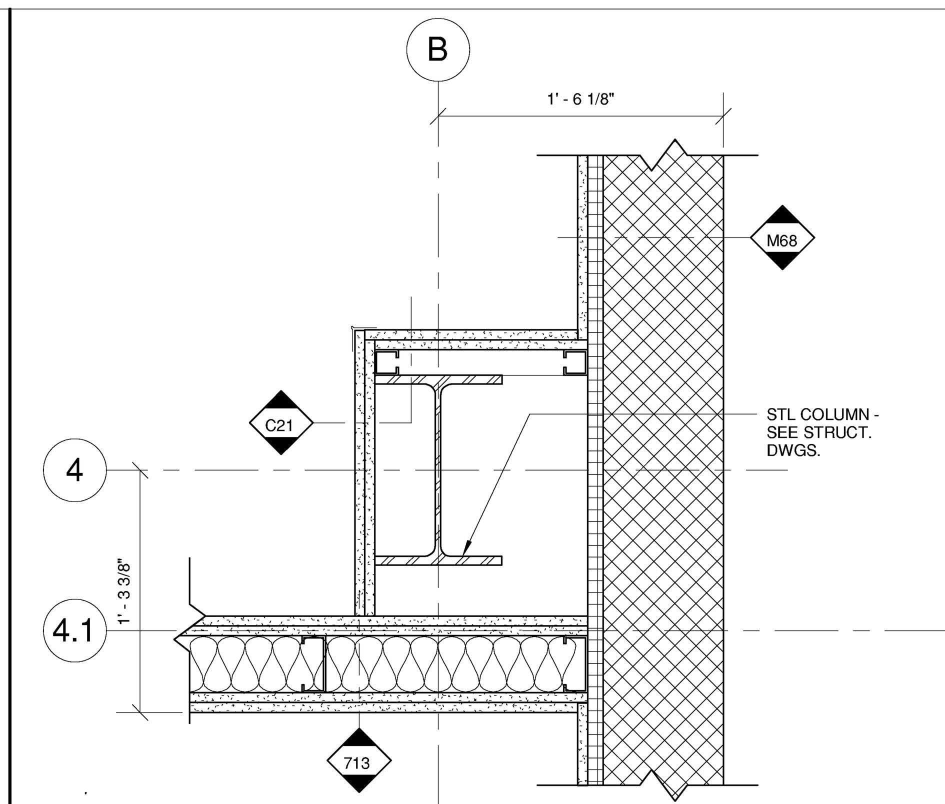

D1 PLAN DETAIL
1 1/2" = 1'-0"

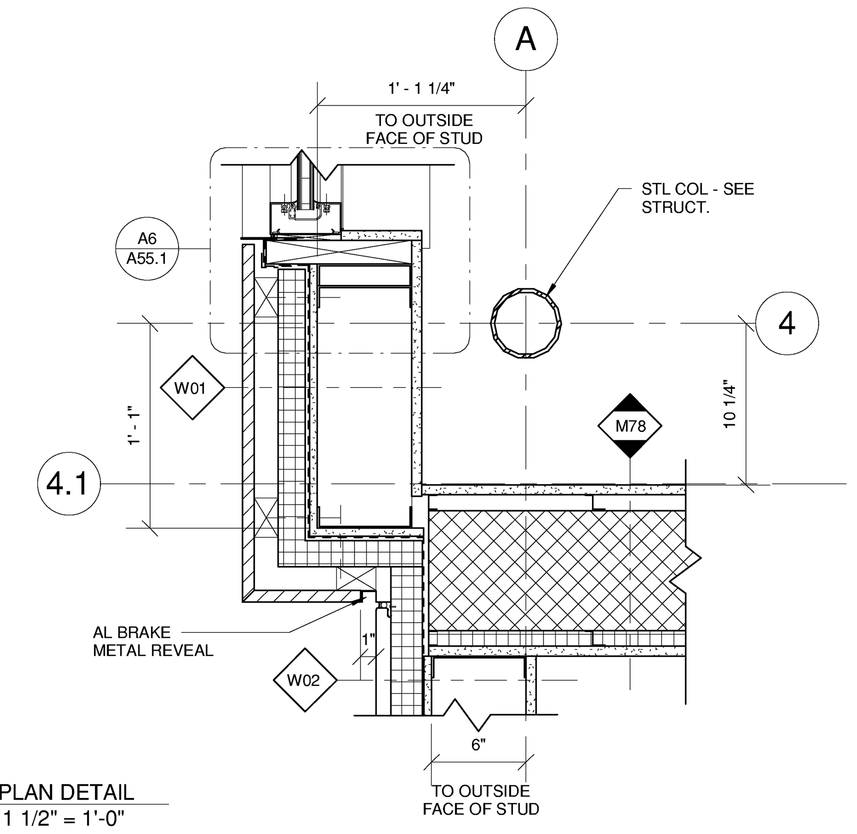

C4 PLAN DETAIL
1 1/2" = 1'-0"

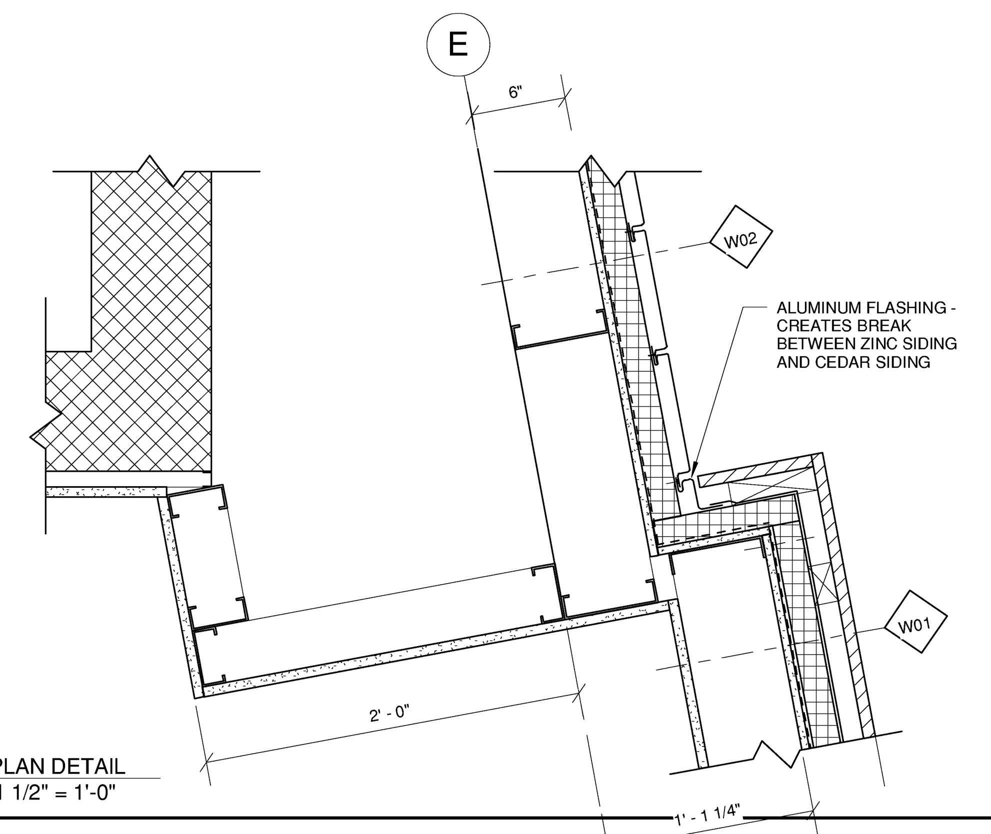

C3 PLAN DETAIL
1 1/2" = 1'-0"

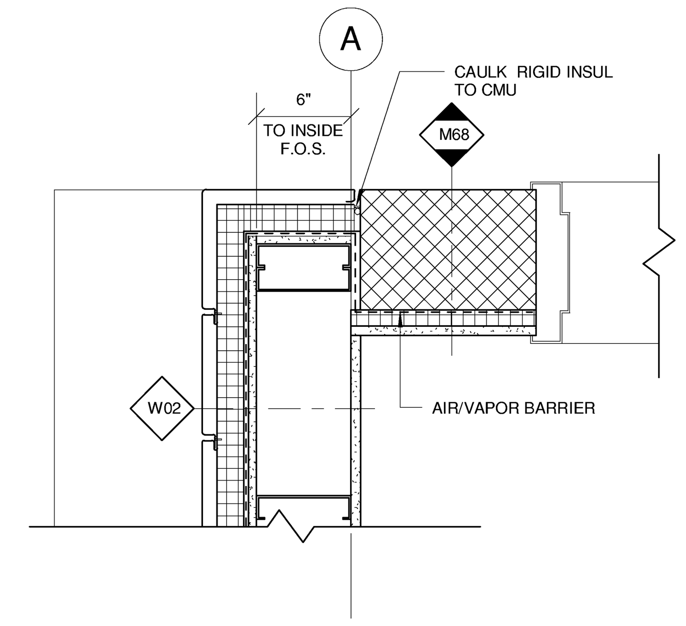

C2 PLAN DETAIL
1 1/2" = 1'-0"

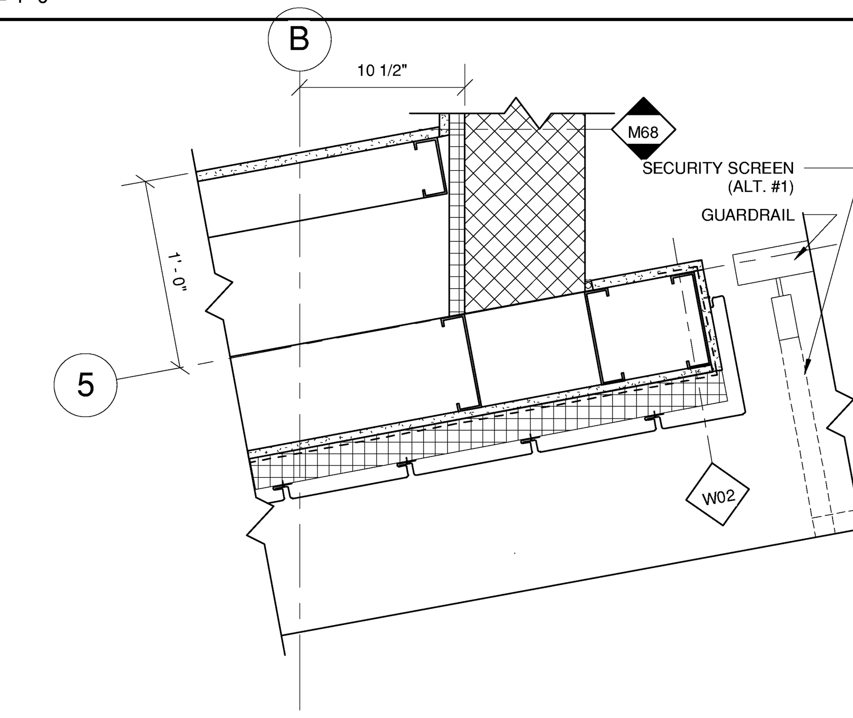

C1 PLAN DETAIL
1 1/2" = 1'-0"

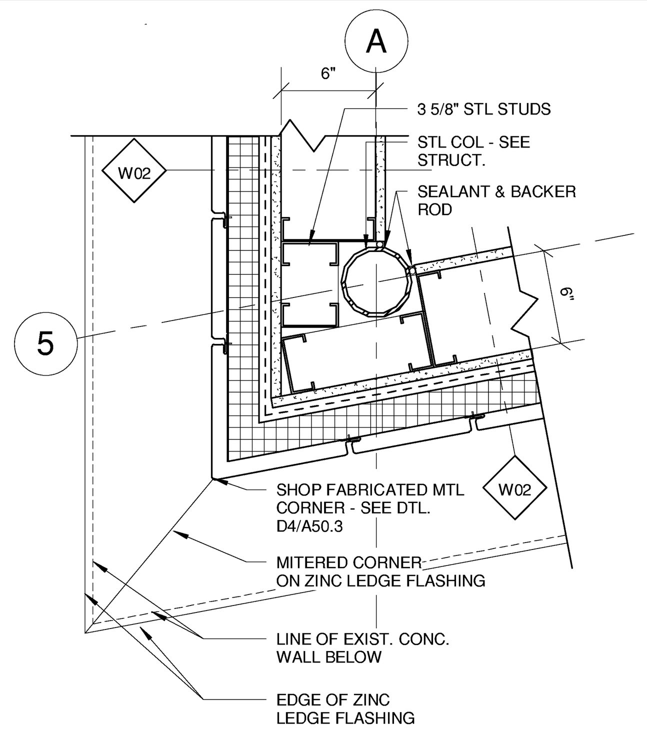

B4 PLAN DETAIL
1 1/2" = 1'-0"

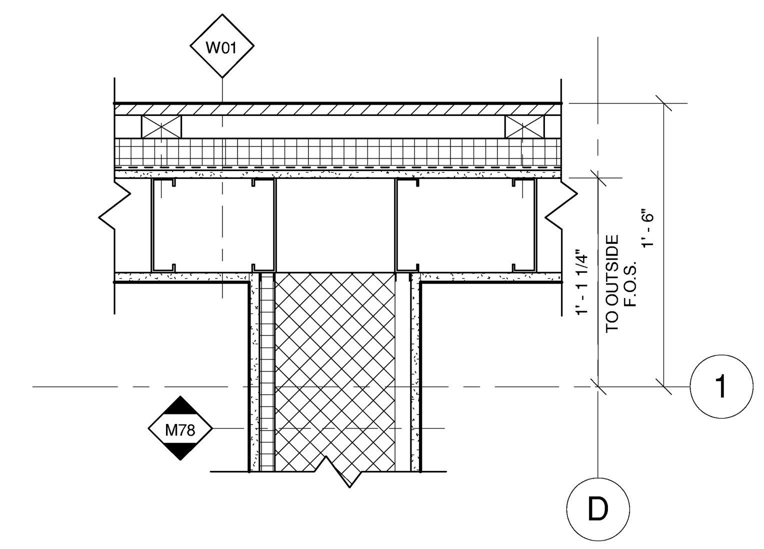

B3 PLAN DETAIL
1 1/2" = 1'-0"

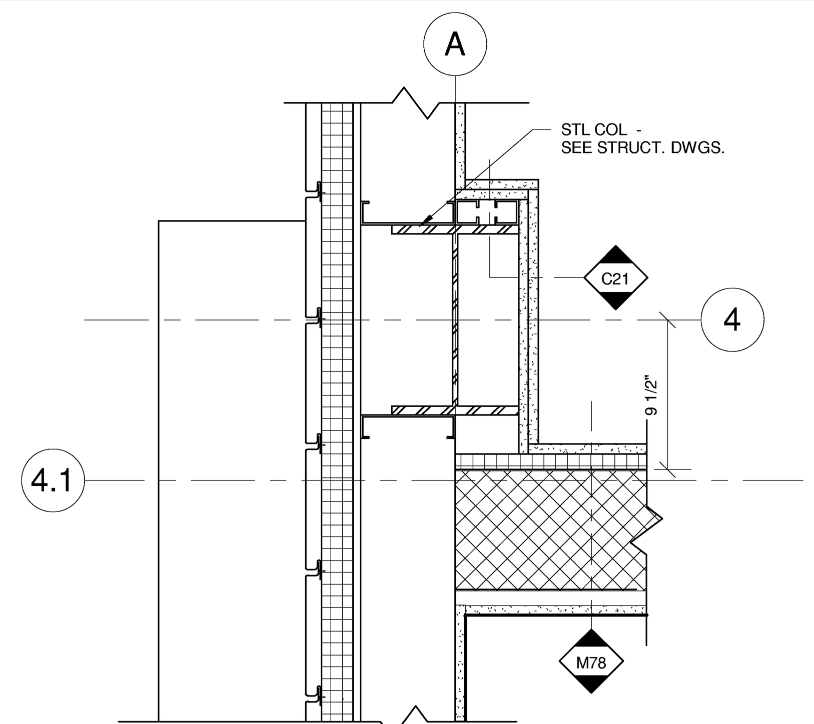

B2 PLAN DETAIL
1 1/2" = 1'-0"

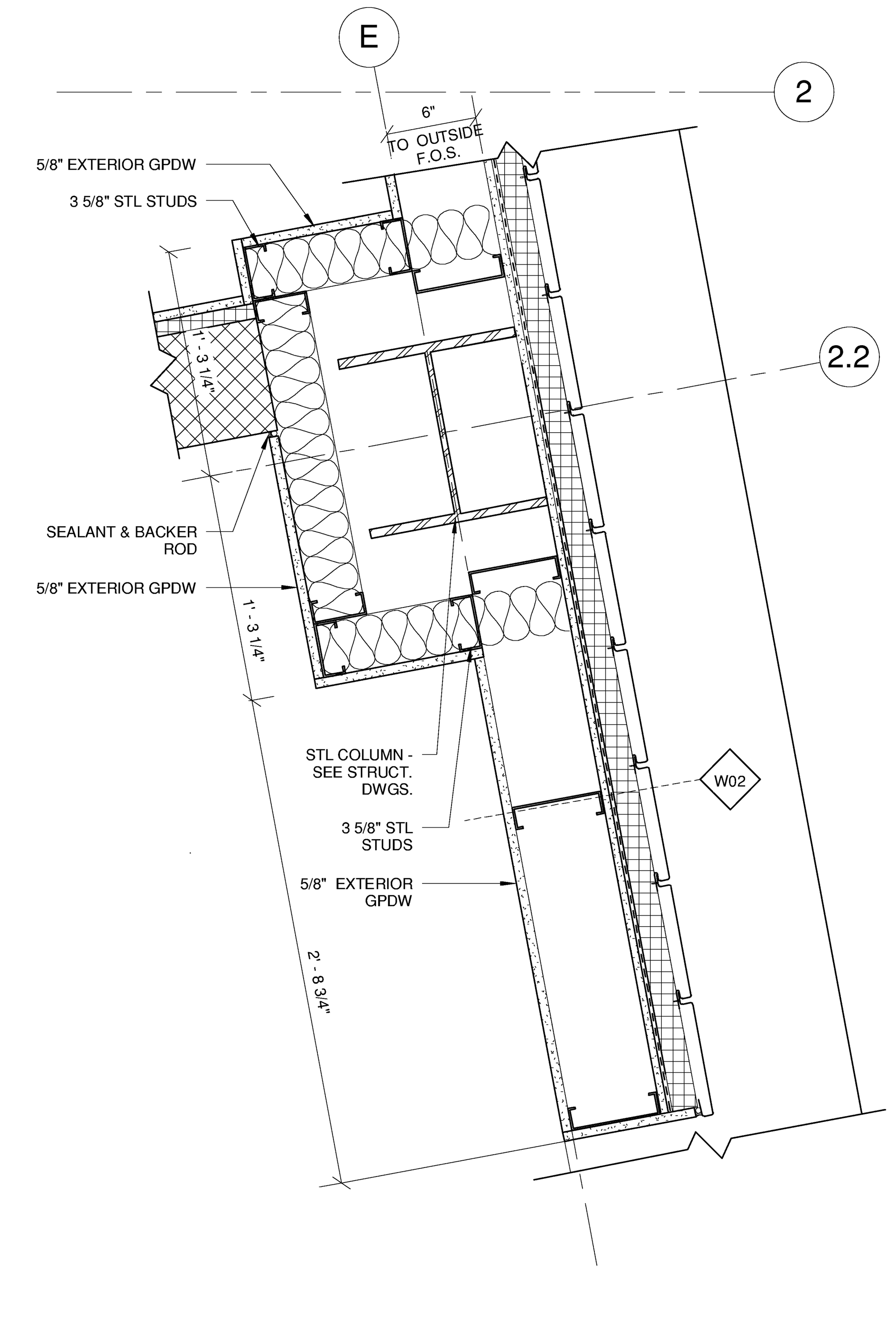

A1 PLAN DETAIL
1 1/2" = 1'-0"

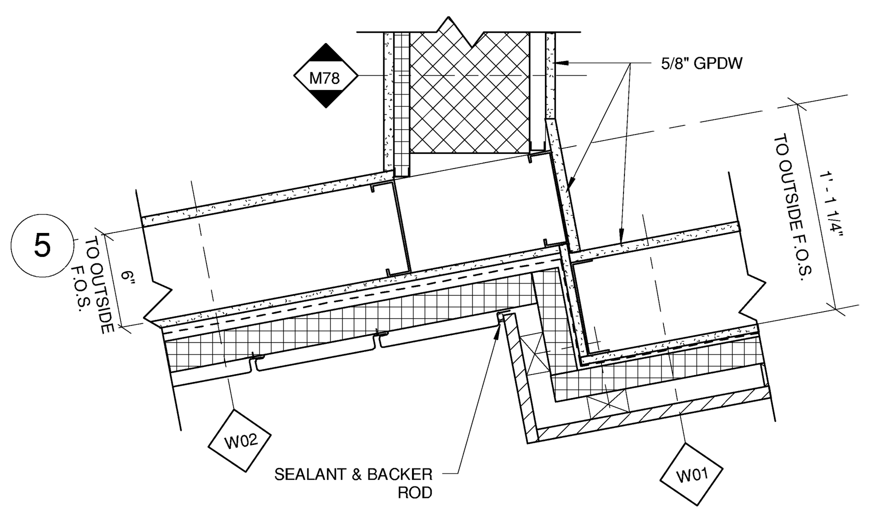

A4 PLAN DETAIL
1 1/2" = 1'-0"

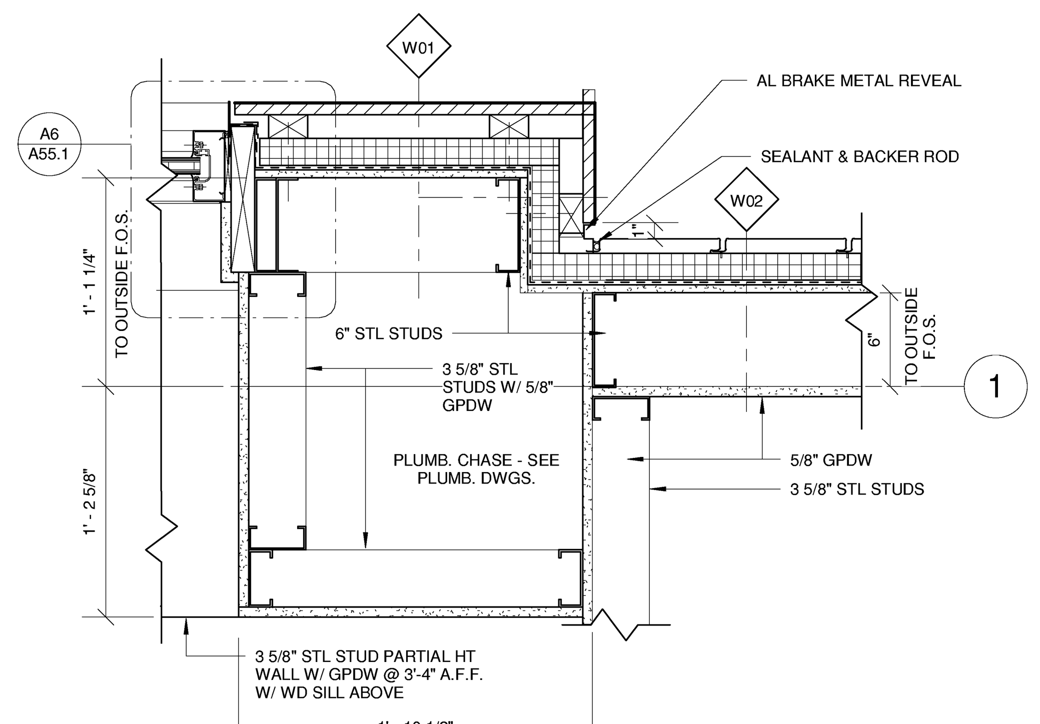

A3 PLAN DETAIL
1 1/2" = 1'-0"

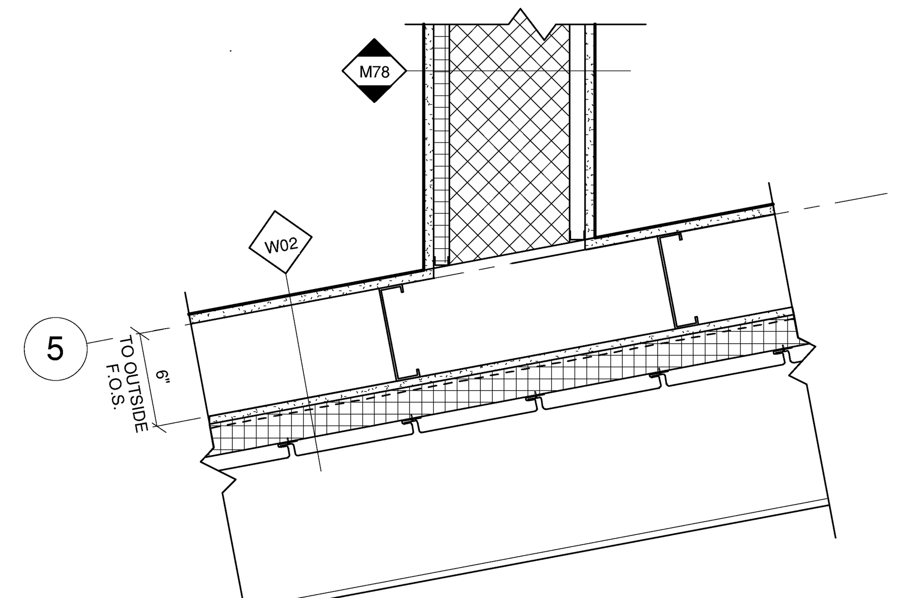

A2 PLAN DETAIL
1 1/2" = 1'-0"

Architects + Engineers
HARRIMAN ASSOCIATES
One Auburn Business Park
Auburn, ME 04210
PH: 207.784.5100
Fax: 207.782.3017
66 Pearl Street, Suite 301
Portland, ME 04101
PH: 207.784.5100
Fax: 207.775-0460

Maine Heart Surgical Associates

New Office Building

Portland, ME

Project Number 04180

Key Plan

LICENSED ARCHITECT PATRICK SEAN COSTIN No. 2026 STATE OF MAINE

General Notes:

No.	Description	Date
	ISSUED FOR BID	4-28-05

Drawing Status:

Exterior Plan Details

Issue Date: 04-28-05

Drawn By: JGJ

PA / PE: PSC

A50.4

Scale 1 1/2" = 1'-0"

4/28/2005 2:47:56 PM