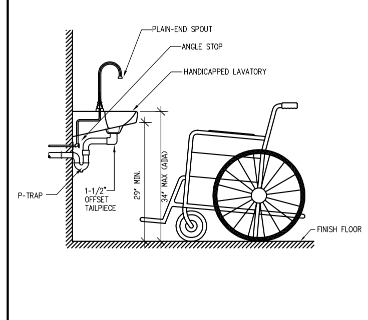

1 ACCESSIBLE LAVATORY
SCALE: NTS

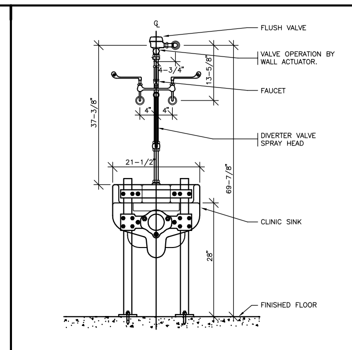

2 CLINICAL SERVICE SINK
SCALE: NTS

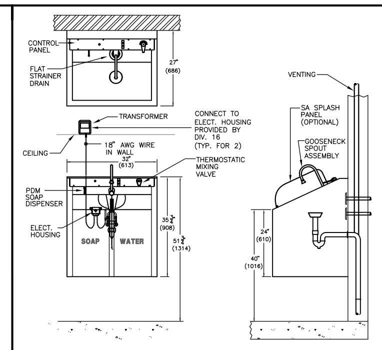

3 SINGLE SCRUB SINK WITH SENSOR CONTROL FAUCET
SCALE: NTS

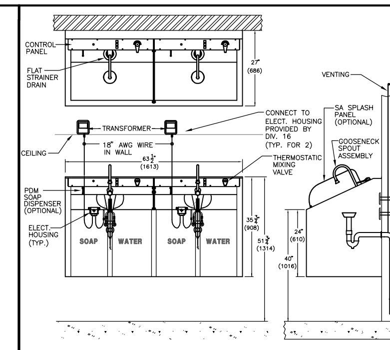

4 DOUBLE SCRUB SINK WITH SENSOR CONTROL FAUCET
SCALE: NTS

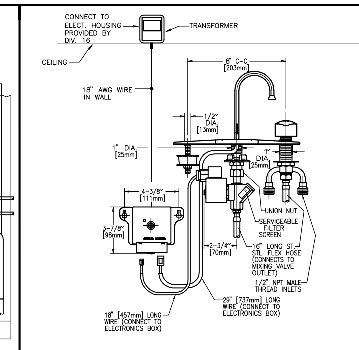

5 DOUBLE SCRUB SINK WITH SENSOR CONTROL FAUCET
SCALE: NTS

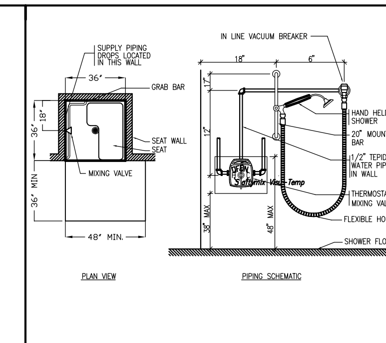

6 36" X 36" PATIENT SHOWER PLAN AND PIPING SCHEMATIC
SCALE: NTS

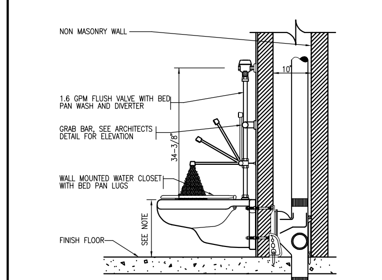

NOTE:
HANDICAPPED WC MOUNTING HIGHT SHALL BE 17" FROM FINISH FLOOR TO FIXTURE RIM.
STANDARD USE WC MOUNTING HIGHT SHALL BE 15" FROM FINISH FLOOR TO FIXTURE RIM.

7 WATER CLOSET WITH BEDPAN WASH
SCALE: NTS

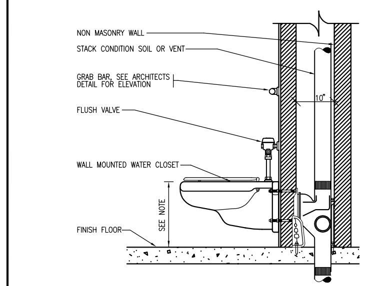

NOTE:
HANDICAPPED WC MOUNTING HIGHT SHALL BE 17" FROM FINISH FLOOR TO FIXTURE RIM.
STANDARD USE WC MOUNTING HIGHT SHALL BE 15" FROM FINISH FLOOR TO FIXTURE RIM.

8 SINGLE FIXTURE CHASE CROSS SECTION
SCALE: NTS

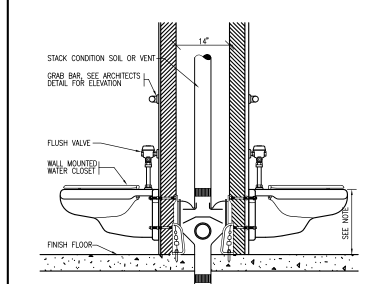

NOTE:
HANDICAPPED WC MOUNTING HEIGHT SHALL BE 17" FROM FINISH FLOOR TO FIXTURE RIM.
STANDARD USE WC MOUNTING HEIGHT SHALL BE 15" FROM FINISH FLOOR TO FIXTURE RIM.

9 CHASE CROSS SECTION
SCALE: NTS

NOTE:
1. FIRESTOP SEALANTS AND PIPING PENETRATIONS THROUGH FIRE RATED ASSEMBLIES SHALL COMPLY WITH THE UL FIRE RESISTANCE DIRECTORY.

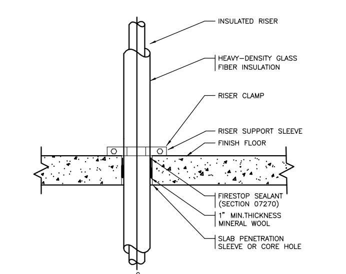

10 TYPICAL INSULATED PIPE SLAB PENETRATION SLEEVE DETAIL
SCALE: NTS

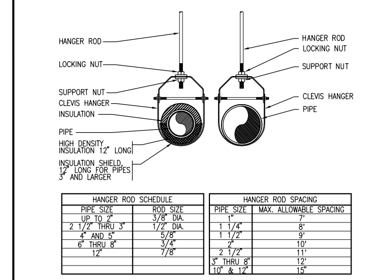

HANGER ROD SCHEDULE	
PIPE SIZE	ROD SIZE
UP TO 2"	3/8" DIA.
2 1/2" THRU 3"	1/2" DIA.
4" AND 5"	5/8"
6" THRU 8"	3/4"
12"	7/8"

HANGER ROD SPACING	
PIPE SIZE	MAX. ALLOWABLE SPACING
1"	7'
1 1/4"	8'
1 1/2"	9'
2"	10'
2 1/2"	11'
3" THRU 8"	12'
10" & 12"	15'

11 PLUMBING PIPE HANGER INSTALLATION
SCALE: NTS

NOTE: DISTRIBUTION UNIT MAY SERVE UP TO 4 FLOOR DRAINS

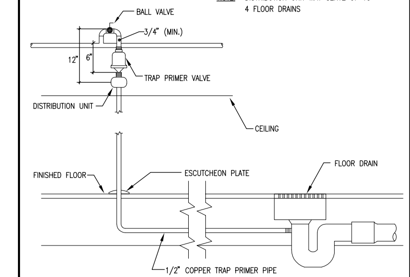

12 FLOOR DRAIN TRAP PRIMER DETAIL
SCALE: NTS

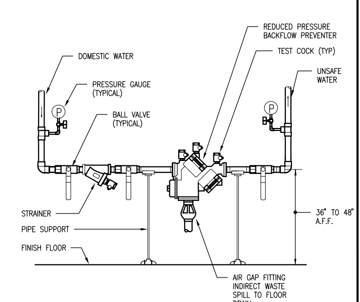

13 REDUCED PRESSURE BACKFLOW PREVENTER (OPTION 1)
SCALE: NTS

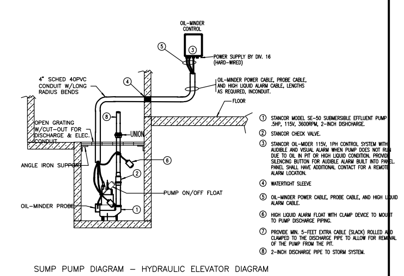

14 ELEVATOR SUMP PUMP DETAIL
SCALE: NTS

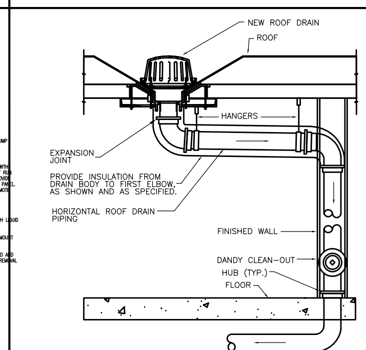

15 ROOF DRAIN PIPING CONNECTION DETAIL
SCALE: NTS

NOTES:
1. ACCESS DOOR SHALL BE 10" WIDE x 10" HIGH, AS MANUFACTURED BY "ELMDOOR", SLK SERIES, FABRICATED OF 14 GAGE GALVANNEELED STEEL WITH 16 GAGE, VERTICAL REINFORCED CHANNEL. DOORS SHALL BE FURNISHED COMPLETE WITH CONCEALED HINGE, LOCKING DEVICE, AND PRIME COATED. COORDINATE LOCATION WITH TOILET ROOM GRAB BARS, ETC.
2. THIS DETAIL APPLIES TO ALL WATERCLOSET AND CLINIC SERVICE SINK LOCATIONS.

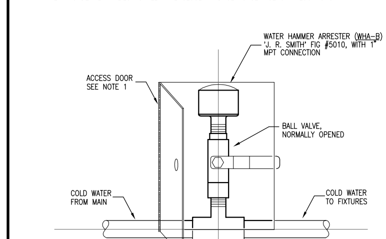

16 WATER HAMMER ARRESTER PIPING DETAIL
SCALE: NTS

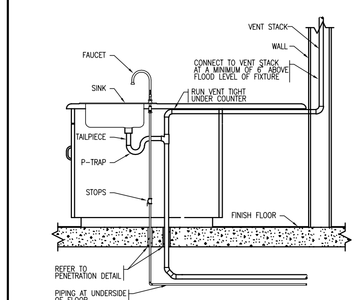

17 ISLAND SINK VENTING DETAIL
SCALE: NTS

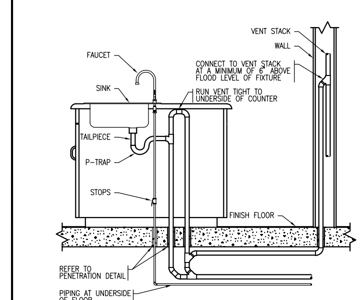

18 ISLAND SINK VENTING DETAIL
SCALE: NTS

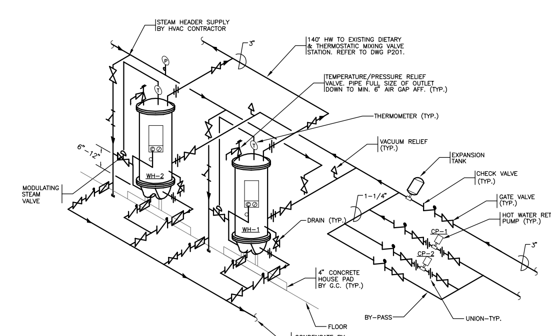

19 INSTANTANEOUS STEAM WATER HEATER PIPING ISOMETRIC
SCALE: NTS

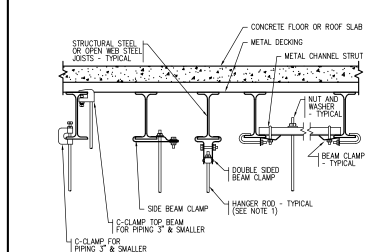

NOTE 1
REFER TO PIPE HANGER DETAIL FOR HANGER ROD SIZE. FOR CEILING SUSPENDED EQUIPMENT PROVIDE MIN. 3/8" DIA. HANGER ROD (REFER TO MANUFACTURERS INSTALLATION INSTRUCTIONS).

20 TYP METHODS OF SECURING HANGER RODS TO STEEL
SCALE: NTS

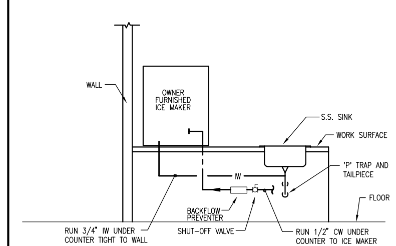

21 COUNTER MOUNTED ICE MAKER PIPING DETAIL
SCALE: NTS

General Notes:

MARK	ISSUE DATE	DESCRIPTION
PERMIT	09/24/04	PERMIT SET – NOT FOR CONSTRUCTION

FOR PERMIT ONLY - NOT FOR CONSTRUCTION

Issue Log

Key Plan

CHARLES STREET
CHARLES STREET PROJECT
CONNECTOR
RICHARDS
LOBBY
PAVILION A
Project North

TRO
ARCHITECTURE
PLANNING
ENGINEERING
INTERIOR DESIGN
The Ritchie Organization
80 Bridge Street
Newton, MA 02458-1134
617-969-9400

Maine Medical Center
Charles Street Project
Portland, Maine MMC Project No. 21841

Drawing Title
PLUMBING TYPICAL DETAILS

0' 0 0 0 0

Commission No.	4673	Date Issued	
Scale	NTS	Sheet Number	
Drawn By	SDB		
Approved By	RMH		P002
Filename	4673_P002		

Copyright © 2004 The Ritchie Organization