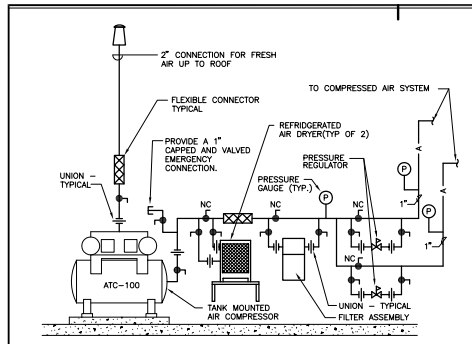

NOTES:

1. HYDROGARD REFIGERATED AIR DRYER, MODEL #HG50 RATED @ 50 SCFM @ 220 PSIG, 0.86 KW, ½ HP, 115/1/60 ELECTRICAL REQUIREMENTS, 135 LBS.
2. RUN ¾" DRAIN FROM REFRIGERATED DRYERS TO NEAREST FLOOR DRAIN.

X PROCESS AIR COMPRESSOR
SCALE: NTS

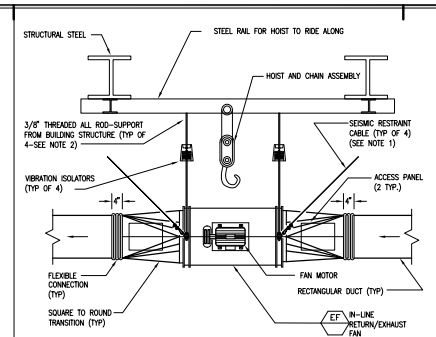

NOTES:

1. INSTALL SEISMIC RESTRAINT CABLE PER SPECIFICATIONS, SMACNA SEISMIC RESTRAINT MANUAL-GUIDELINES FOR MECHANICAL SYSTEMS, AND "TYPICAL SEISMIC BRACING FOR CEILING MOUNTED EQUIPMENT DETAIL".
2. REFER TO "TYPICAL METHOD OF SECURING HANGER RODS DETAIL" FOR ATTACHING FAN TO BUILDING STRUCTURE.

X INLINE CENTRIFIGAL EXHAUST FAN INSTALLATION DETAIL
SCALE: NTS

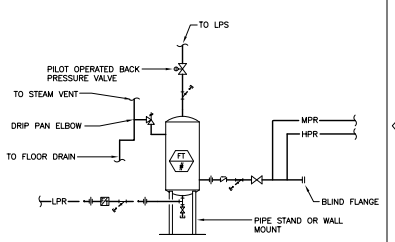

X VERTICAL FLASH TANK DETAIL
SCALE: NTS

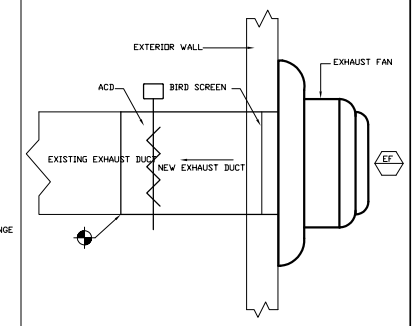

X WALL MOUNTED EXHAUST FAN DETAIL
SCALE: NTS

General Notes:

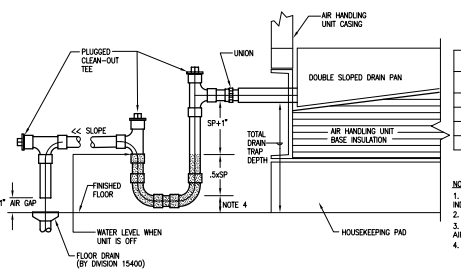

AIR HANDLING UNIT DRAIN TRAP SCHEDULE

ITEM	DRAIN SIZE	UNIT NEGATIVE PRESSURE	TOTAL DRAIN TRAP DEPTH	HOUSEKEEPING PAD HEIGHT
AHU-1	–	–	–	–
AHU-1	–	–	–	–
AHU-1	–	–	–	–
AHU-1	–	–	–	–

NOTES:

1. DRAIN LINE SIZE SHALL BE A MINIMUM OF THE UNIT DRAIN PAN CONNECTION OR THE SIZE INDICATED ON THE DRAWINGS.
2. MANUALLY PRIME FILL DRAIN TRAP PRIOR TO START-UP OF AIR HANDLING UNIT.
3. THE "SP" DESIGNATION REFERS TO THE TOTAL NEGATIVE PRESSURE DEVELOPED IN THE AIR HANDLING UNIT.
4. NOMINAL DRAIN PIPE SIZE+1/2"

X AIR HANDLING UNIT COOLING COIL DRAIN TRAP DETAIL – DRAW THRU TYPE UNIT
SCALE: NTS

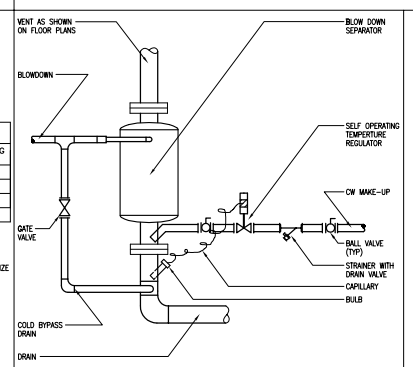

X STEAM BLOWDOWN SEPARATOR PIPING
SCALE: NTS

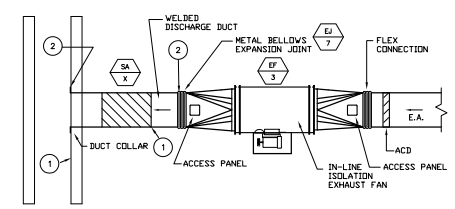

1. INSTALL WARNING LABELS ON BOTTOM OF DISCHARGE DUCT AND INSIDE OF DISCHARGE PLENUM WALL.
2. FLANGED AND GASKETED CONNECTIONS.

X ISOLATION EXHAUST FAN DETAIL
SCALE: NTS

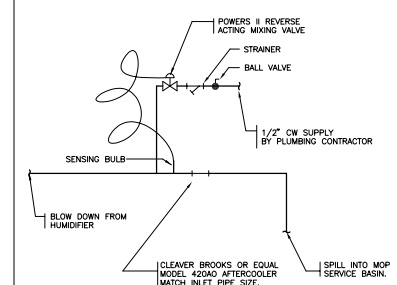

X VERTICAL FAN COIL UNIT PIPING SCEMATIC
SCALE: NTS

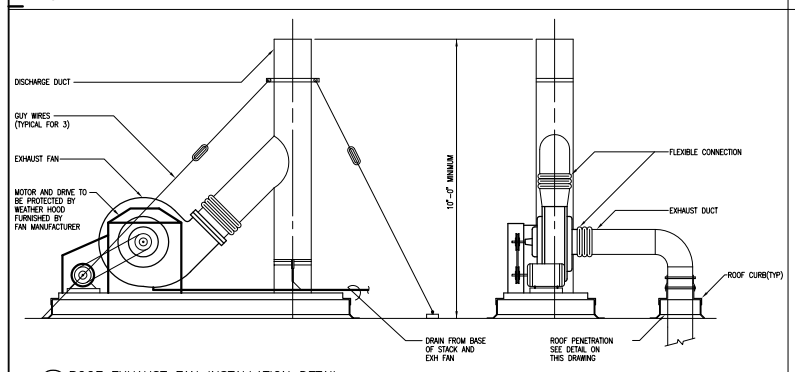

X ROOF EXHAUST FAN INSTALLATION DETAIL
SCALE: NTS

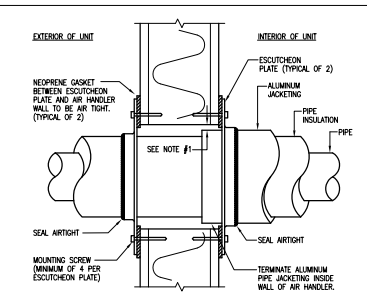

NOTES:

1. HOLE IN UNIT WALL SHALL BE NO MORE THAN 1/2" LARGER IN DIAMETER THAN ALUMINUM JACKETING. FOLLOW CUSTOM AIR HANDLING UNIT MANUFACTURER'S RECOMMENDATIONS ON HOW TO CUT THROUGH UNIT WALL.

X FIELD CUT PIPE PENETRATION THROUGH AIR HANDLER WALL DETAIL
SCALE: NTS

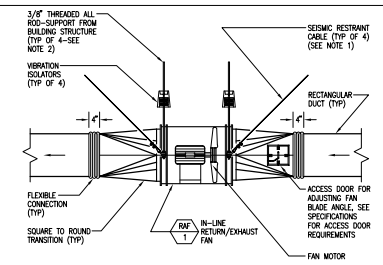

NOTES: 1. INSTALL SEISMIC RESTRANT CABLE PER SPECIFICATIONS, SMACNA SEISMIC RESTRANT MANUAL-GUIDELINES FOR MECHANICAL SYSTEMS, AND "TYPICAL SEISMIC BRACING FOR CEILING MOUNTED EQUIPMENT DETAIL".

2. REFER TO "TYPICAL METHOD OF SECURING HANGER RODS DETAIL" FOR ATTACHING FAN TO BUILDING STRUCTURE.

X INLINE AXIAL RETURN/EXHAUST FAN INSTALLATION DETAIL
SCALE: NTS

MARK	ISSUE DATE	DESCRIPTION
PERMIT	09/24/04	PERMIT SET – NOT FOR CONSTRUCTION

FOR PERMIT ONLY
NOT FOR CONSTRUCTION

Issue Log

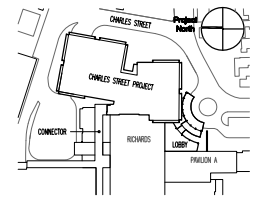

Key Plan

TRO
Architecture
Planning
Engineering
Interior Design
The Fitzhile Organization
80 Bridge Street
Newton, MA 02465-2104
617-969-9400

Maine Medical Center
Charles Street Project
Portland, Maine
MMC Project No. 21841

Drawing Title
HVAC DETAILS

0" 0 0 0 0

Commission No.	4673	Date Issued	
Scale	NTS	Sheet Number	
Drawn By	FWC		
Approved By	CW		H602
Filename	4673H602		

Copyright © 2004 The Fitzhile Organization