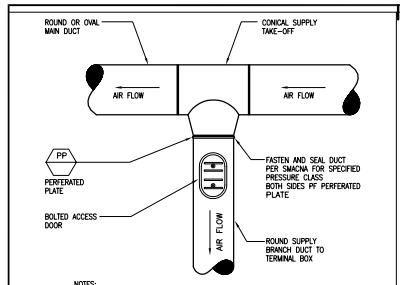


NOTES:
1. PROVIDE INSTRUMENT TEST HOLES ON BOTH SIDES OF PERFORATED PLATE.
2. PERFORATED PLATE SHALL BE FABRICATED FROM 16 GAUGE SHEETMETAL AND SHALL BE DRILLED WITH PERFORATIONS AS SCHEDULED. PERFORATED PLATE SHALL BE TACK WELDED TO BOTH SIDES OF SUPPLY DUCT AND SEALED PER SMACNA (CLASS A).

X HIGH VELOCITY SMOKE DAMPER INSTALLATION DETAIL
SCALE: NTS

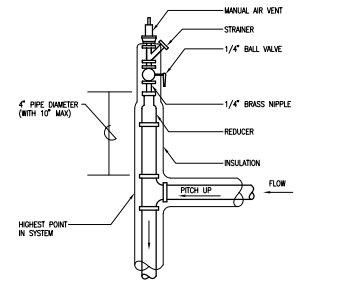


X MANUAL AIR VENT DETAIL
SCALE: NTS

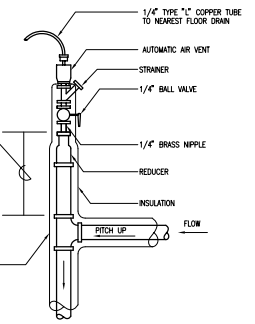


X AUTOMATIC AIR VENT DETAIL
SCALE: NTS

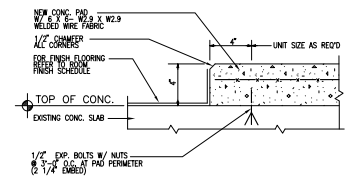


X HOUSE KEEPING PAD DETAIL
SCALE: NTS

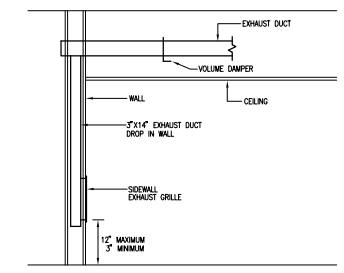


NOTE:
REFER TO ARCHITECTURAL ELEVATIONS FOR LOCATION AND MOUNTING OF EXHAUST GRILLE.

X LOW EXHAUST GRILLE CONNECTION DETAIL
SCALE: NTS

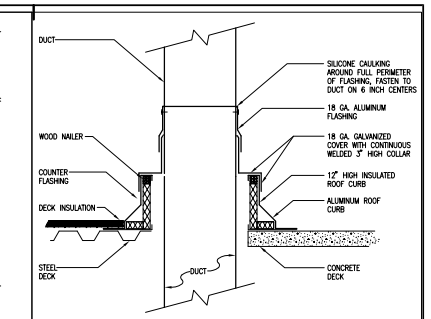


NOTES:
1. COORDINATE CURB STEP HEIGHT WITH ROOF DECK INSULATION THICKNESS

X DUCT PENETRATION THROUGH ROOF
SCALE: NTS

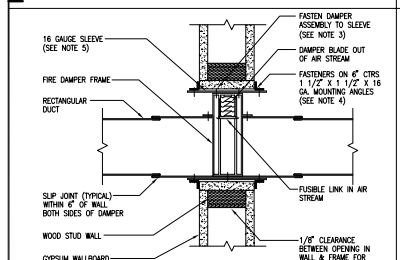


NOTES:
1. INSTALL ACCESS DOOR IN DUCT FOR DAMPER ACCESS.
2. INSTALL IN ACCORDANCE WITH MANUFACTURERS RECOMMENDATIONS AND NFPA-90A.
3. REFER TO SMACNA-"FIRE, SMOKE AND RADIATION DAMPER INSTALLATION GUIDE FOR HVAC SYSTEMS" FOR FIRE DAMPER INSTALLATION DETAILS.
4. MOUNTING ANGLES SHALL BE 2" X 2" X 16 GA. FOR DAMPERS 48" OR LARGER IN WIDTH OR HEIGHT.
5. SLEEVE THICKNESS SHALL NOT BE LESS THAN THE GAUGE OF THE DUCT.

X VERTICAL FIRE DAMPER INSTALLATION DETAIL LOW PRESSURE RECTANGULAR DUCT
SCALE: NTS

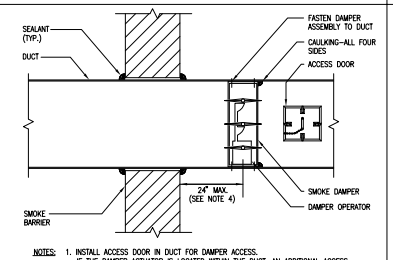


NOTES:
1. INSTALL ACCESS DOOR IN DUCT FOR DAMPER ACCESS. IF THE DAMPER ACTUATOR IS LOCATED WITHIN THE DUCT, AN ADDITIONAL ACCESS DOOR MUST BE PROVIDED.
2. INSTALL IN ACCORDANCE WITH MANUFACTURERS RECOMMENDATIONS AND NFPA-90A.
3. REFER TO SMACNA-"FIRE, SMOKE AND RADIATION DAMPER INSTALLATION GUIDE FOR HVAC SYSTEMS" FOR FIRE DAMPER INSTALLATION DETAILS.
4. WHERE POSSIBLE, LOCATE THE DAMPER IN THE SMOKE BARRIER AT THE POINT WHERE THE DUCT PASSES THROUGH THE SMOKE BARRIER. IN NO CASE SHALL THE DAMPER BE INSTALLED MORE THAN 24" FROM THE SMOKE BARRIER OR AFTER THE FIRST SUPPLY, RETURN, OR EXHAUST REGISTER, OR DUCT TAKE-OFF.

X SMOKE DAMPER AT SMOKE BARRIER INSTALLATION DETAIL
SCALE: NTS

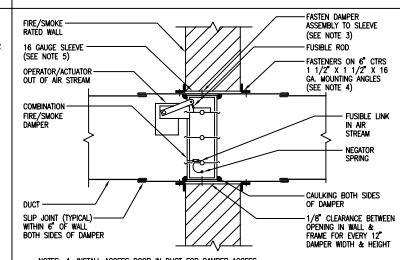


NOTES:
1. INSTALL ACCESS DOOR IN DUCT FOR DAMPER ACCESS.
2. INSTALL IN ACCORDANCE WITH MANUFACTURERS RECOMMENDATIONS AND NFPA-90A.
3. REFER TO SMACNA-"FIRE, SMOKE AND RADIATION DAMPER INSTALLATION GUIDE FOR HVAC SYSTEMS" FOR FIRE DAMPER INSTALLATION DETAILS.
4. MOUNTING ANGLES SHALL BE 2" X 2" X 16 GA. FOR DAMPERS 48" OR LARGER IN WIDTH OR HEIGHT.
5. SLEEVE THICKNESS SHALL NOT BE LESS THAN THE GAUGE OF THE DUCT.
6. FIRE DAMPER MODE: HIGH TEMPERATURE MELTS FUSIBLE LINK, CLOSING FIRE DAMPER.
7. SMOKE DAMPER MODE: SMOKE DETECTOR UPON SENSING HEAT/SMOKE ACTUATES DAMPER MOTOR TO CLOSE DAMPER.

X VERTICAL COMBINATION FIRE/SMOKE DAMPER INSTALLATION DETAIL
SCALE: NTS

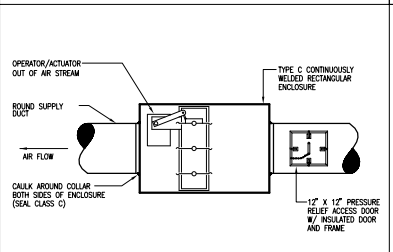


NOTES:
1. INSTALL RELIEF TYPE ACCESS DOOR IN DUCT FOR DAMPER ACCESS.
2. INSTALL IN ACCORDANCE WITH MANUFACTURERS RECOMMENDATIONS AND NFPA-90A.
3. REFER TO SMACNA-"FIRE, SMOKE AND RADIATION DAMPER INSTALLATION GUIDE FOR HVAC SYSTEMS" FOR SMOKE DAMPER INSTALLATION DETAILS.

X VERTICAL SMOKE DAMPER DETAIL – ROUND DUCT
SCALE: NTS

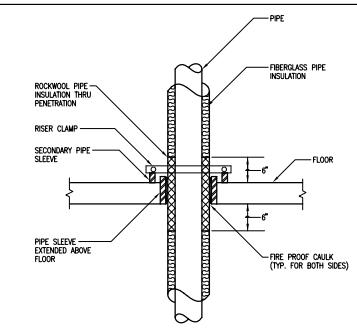


X TYPICAL FIRE RATED FLOOR PIPE PENETRATION
SCALE: NTS

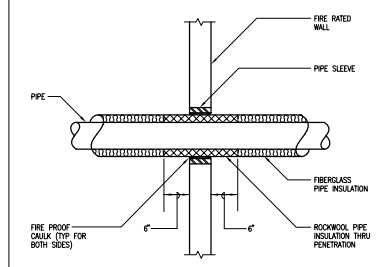


X TYPICAL FIRE-RATED WALL PIPE PENETRATION
SCALE: NTS

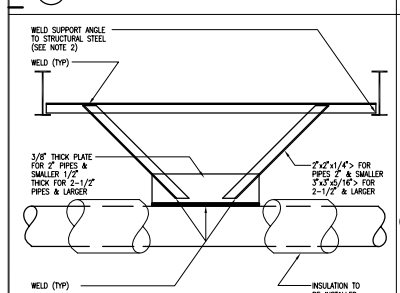


NOTES:
1. CONTRACTOR TO SUBMIT SKETCH OF PROPOSED INSTALLATION INCLUDING SIZES OF MEMBERS, WELDS, & BOLTS TO STRUCTURAL ENGINEER FOR APPROVAL.
2. WELD ENTIRE LENGTH OF SUPPORT ANGLE WHERE SUPPORT ANGLE IS RUN PARALLEL TO STRUCTURAL STEEL.

X PIPE ANCHOR DETAIL STRUCTURAL STEEL
SCALE: NTS

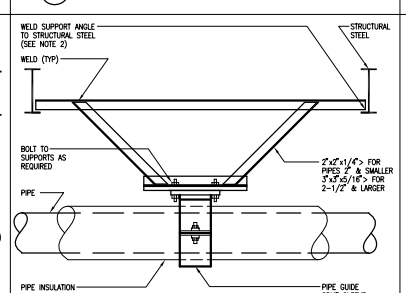


NOTES:
1. CONTRACTOR TO SUBMIT SKETCH OF PROPOSED INSTALLATION INCLUDING SIZES OF MEMBERS, WELDS, & BOLTS TO STRUCTURAL ENGINEER FOR APPROVAL.
2. WELD ENTIRE LENGTH OF SUPPORT ANGLE WHERE SUPPORT ANGLE IS RUN PARALLEL TO STRUCTURAL STEEL.

X PIPE GUIDE SUPPORT DETAIL STRUCTURAL STEEL
SCALE: NTS

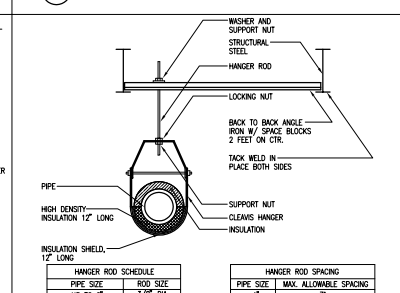


| HANGER ROD SCHEDULE | |
|---|---|
| PIPE SIZE | ROD SIZE |
| 4" | 5/8" DIA. |
| 5" | 5/8" DIA. |
| 6" | 3/4" DIA. |
| 8" | 7/8" DIA. |
| 10" | 7/8" DIA. |
| 12" | 7/8" DIA. |

| HANGER ROD SPACING | |
|---|---|
| PIPE SIZE | MAX. ALLOWABLE SPACING |
| 1" | 7' |
| 1 1/4" | 8' |
| 1 1/2" | 9' |
| 2" | 10' |
| 2 1/2" | 11' |
| 3" THRU 8" | 12' |
| 10" & 12" | 15' |

X PIPE HANGER INSTALLATION DETAIL
SCALE: NTS

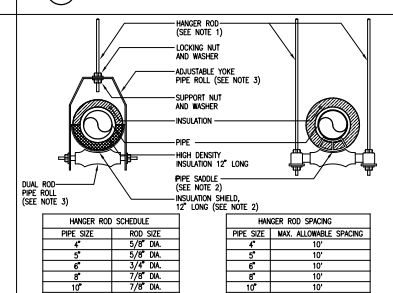


| HANGER ROD SCHEDULE | |
|---|---|
| PIPE SIZE | ROD SIZE |
| 4" | 5/8" DIA. |
| 5" | 5/8" DIA. |
| 6" | 3/4" DIA. |
| 8" | 7/8" DIA. |
| 10" | 7/8" DIA. |
| 12" | 7/8" DIA. |

| HANGER ROD SPACING | |
|---|---|
| PIPE SIZE | MAX. ALLOWABLE SPACING |
| 4" | 10' |
| 5" | 10' |
| 6" | 10' |
| 8" | 10' |
| 10" | 10' |
| 12" | 10' |

NOTES:
1. REFER TO "TYPICAL METHOD OF SECURING HANGER RODS DETAIL" FOR ATTACHING HANGERS TO THE STRUCTURE.
2. PROVIDE INSULATION SHIELD ON PIPE SADDLE BASED ON THE PIPING SYSTEM AND PIPE SIZE AS INDICATED IN THE SPECIFICATIONS.
3. ADJUSTABLE YOKE ROLL SHALL BE USED ON 4" AND 5" PIPING. ON ALL PIPING 6" AND LARGER USE DUAL ROD PIPE ROLL.

X PIPE ROLL TYPE PIPE HANGER INSTALLATION DETAIL
SCALE: NTS

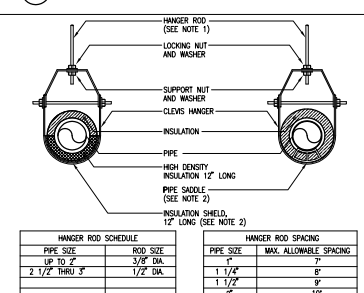


| HANGER ROD SCHEDULE | |
|---|---|
| PIPE SIZE | ROD SIZE |
| 4" | 7" |
| UP TO 2" | 3/8" DIA. |
| 2 1/2" THRU 3" | 1/2" DIA. |

| HANGER ROD SPACING | |
|---|---|
| PIPE SIZE | MAX. ALLOWABLE SPACING |
| 1" | 6' |
| 1 1/4" | 8' |
| 1 1/2" | 9' |
| 2" | 10' |
| 2 1/2" | 10' |
| 3" | 10' |

NOTES:
1. REFER TO "TYPICAL METHOD OF SECURING HANGER RODS DETAIL" FOR ATTACHING HANGERS TO THE STRUCTURE.
2. PROVIDE INSULATION SHIELD OR PIPE SADDLE BASED ON THE PIPING SYSTEM AND PIPE SIZE AS INDICATED IN THE SPECIFICATIONS.
3. CLEVIS TYPE PIPE HANGER SHALL BE USED ON ALL PIPING 3" AND SMALLER.

X CLEVIS TYPE PIPE HANGER INSTALLATION DETAIL
SCALE: NTS

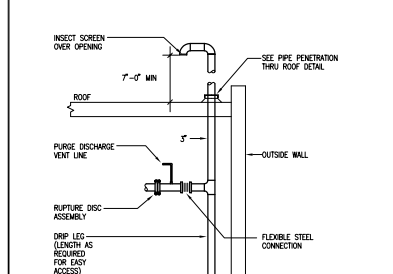


X REFRIGERANT VENT PIPING DETAIL
SCALE: NTS

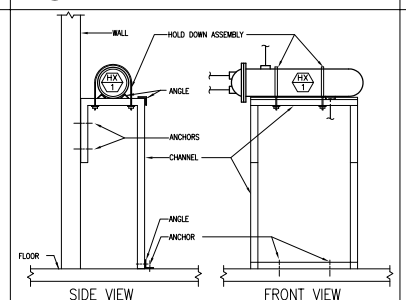


NOTES:
1.) SIZING OF CHANNELS, ANGLES, ANCHORS, ETC., SHALL BE PER SPECIFICATION SECTION 15240 VIBRATION ISOLATION/SEISMIC RESTRAINTS.

X HEAT EXCHANGER SUPPORT DETAIL
SCALE: NTS

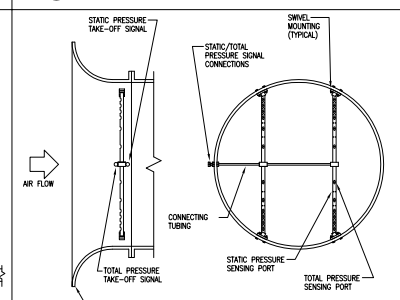


NOTES:
1. INSTALL IN ACCORDANCE WITH MANUFACTURERS RECOMMENDATIONS AND NFPA-90A.

X FAN INLET AIR FLOW STATION INSTALLATION DETAIL
SCALE: NTS

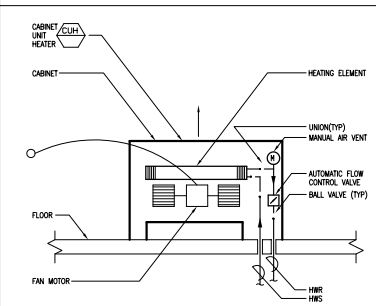


NOTES:
1. CABINET UNIT HEATERS FED FROM ABOVE TO BE PROVIDED WITH 3/4" DRAIN VALVE WITH HOSE CONNECTION AT LOW POINT

X CABINET UNIT HEATER INSTALLATION DETAIL FED FROM BELOW
SCALE: NTS

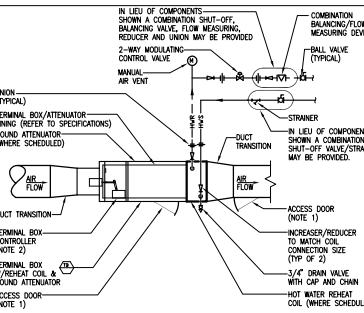


NOTES:
1. PROVIDE ACCESS DOORS UPSTREAM AND DOWNSTREAM OF REHEAT COIL TO FACILITATE CLEANING OF COIL. ACCESS DOOR UPSTREAM OF REHEAT COIL SHALL BE PROVIDED BY TERMINAL BOX MANUFACTURER.
2. MAINTAIN MIN. 18" CLEAR IN FRONT OF TERMINAL BOX CONTROLLER FOR MAINTENANCE.

X SINGLE DUCT TERMINAL BOX INSTALLATION DETAIL
SCALE: NTS

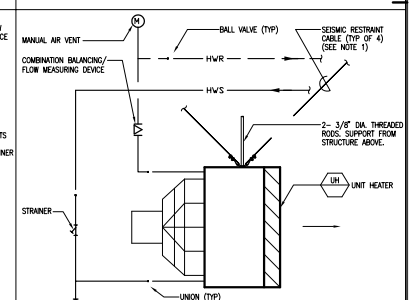


NOTES:
1. INSTALL SEISMIC RESTRAINT CABLE PER SPECIFICATIONS, SMACNA SEISMIC RESTRAINT MANUAL-GUIDELINES FOR MECHANICAL SYSTEMS, AND TYPICAL SEISMIC BRACING FOR CEILING MOUNTED EQUIPMENT DETAIL.

X HOT WATER UNIT HEATER INSTALLATION DETAIL
SCALE: NTS

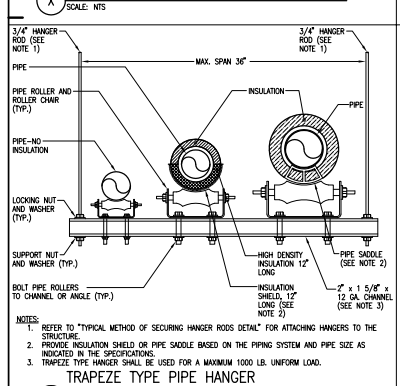


NOTES:
1. REFER TO "TYPICAL METHOD OF SECURING HANGER RODS DETAIL" FOR ATTACHING HANGERS TO THE STRUCTURE.
2. PROVIDE INSULATION SHIELD OR PIPE SADDLE BASED ON THE PIPING SYSTEM AND PIPE SIZE AS INDICATED IN THE SPECIFICATIONS.
3. TRAPEZE TYPE HANGER SHALL BE USED FOR A MAXIMUM 1000 LB. UNIFORM LOAD.

X TRAPEZE TYPE PIPE HANGER INSTALLATION DETAIL
SCALE: NTS

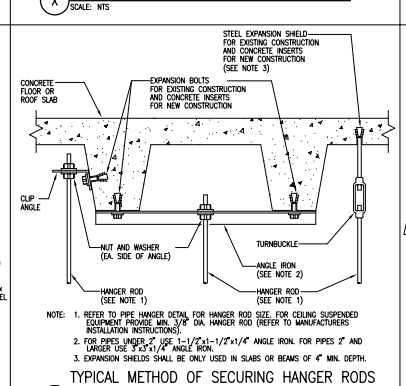


NOTE: 1. REFER TO PIPE HANGER DETAIL FOR HANGER ROD SIZE. FOR CEILING SUSPENDED EQUIPMENT PROVIDE MIN. 3/8" DIA. HANGER ROD (REFER TO MANUFACTURERS INSTALLATION INSTRUCTIONS).
2. FOR PIPES UNDER 2" USE 1-1/2"x1-1/2"x1/4" ANGLE IRON, FOR PIPES 2" AND LARGER USE 2"x2"x1/4" ANGLE IRON.
3. EXPANSION SHIELDS SHALL BE ONLY USED IN SLABS OR BEAMS OF 4" MIN. DEPTH.

X TYPICAL METHOD OF SECURING HANGER RODS TO CONCRETE DECK DETAIL
SCALE: NTS

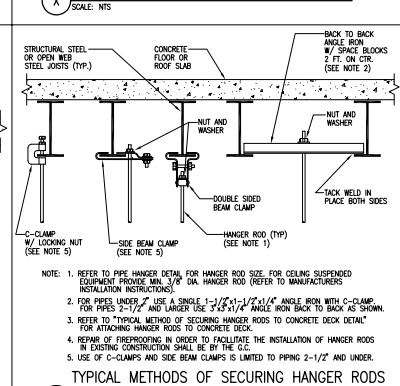


NOTE: 1. REFER TO PIPE HANGER DETAIL FOR HANGER ROD SIZE. FOR CEILING SUSPENDED EQUIPMENT PROVIDE MIN. 3/8" DIA. HANGER ROD (REFER TO MANUFACTURERS INSTALLATION INSTRUCTIONS).
2. FOR PIPES UNDER 2" USE 1-1/2"x1-1/2"x1/4" ANGLE IRON WITH C-CLAMP. FOR PIPES 2-1/2" AND LARGER USE 3"x3"x1/4" ANGLE IRON BACK TO BACK AS SHOWN.
3. REFER TO "TYPICAL METHOD OF SECURING HANGER RODS TO CONCRETE DECK DETAIL" FOR ATTACHING HANGER RODS TO CONCRETE DECK.
4. REPAIR OF FIREPROOFING IN ORDER TO FACILITATE THE INSTALLATION OF HANGER RODS IN EXISTING CONSTRUCTION SHALL BE BY THE G.C.
5. USE OF C-CLAMPS AND SIDE BEAM CLAMPS IS LIMITED TO PIPING 2-1/2" AND UNDER.

X TYPICAL METHODS OF SECURING HANGER RODS TO STRUCTURAL STEEL DETAIL
SCALE: NTS

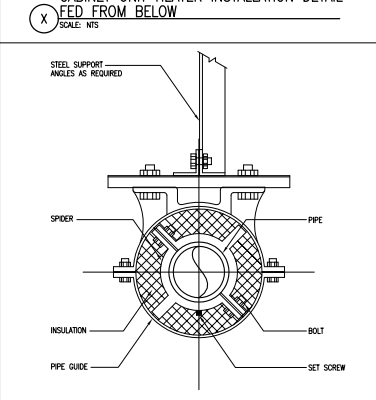


X PIPE GUIDE INSTALLATION DETAIL
SCALE: NTS

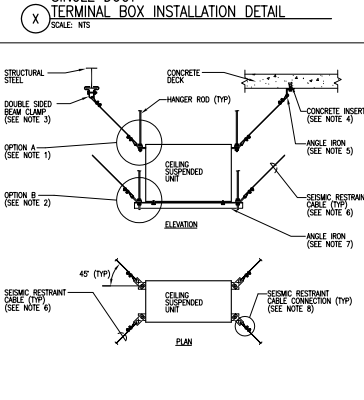


NOTE:
1. OPTION A APPLIES TO EQUIPMENT HAVING TOP OR SIDE ATTACHMENT.
2. OPTION B APPLIES TO EQUIPMENT SUPPORTED FROM THE BOTTOM OF THE EQUIPMENT.
3. USE DOUBLE SIDED BEAM CLAMPS FOR ATTACHMENT TO STRUCTURAL STEEL OR JOISTS.
4. USE CONCRETE INSERTS FOR ATTACHMENT TO CONCRETE DECK TYPE CONSTRUCTION.
5. ANGLE IRON SHALL BE 2-1/2"x2"x1/4" ANGLE 2" WIDE WITH (2) 9/16" HOLES FOR FASTENING TO CONCRETE DECK.
6. SIZE CABLE BASED ON SEISMIC HAZARD LEVEL SPECIFIED. PROVIDE CABLE WITH 1/2" OF SLACK WHERE CABLES ARE USED WITH VIBRATION ISOLATED EQUIPMENT.
7. PROVIDE 2 ANGLES FOR BOTTOM SUPPORT OF UNIT (OPTION B). PROVIDE (4) 2"x 2"x 2"x1/4" ANGLES WELDED TO BOTTOM SUPPORT ANGLES AND TO UNIT. (THIS IS NOT REQUIRED WHERE UNIT IS PROVIDED WITH BOTTOM MOUNTING HOLES).
8. REFER TO SMACNA-"SEISMIC RESTRAINT MANUAL GUIDELINES FOR MECHANICAL SYSTEMS" FOR CABLE CONNECTION DETAIL.

X TYPICAL SEISMIC BRACING FOR CEILING MOUNTED EQUIPMENT DETAIL
SCALE: NTS

General Notes:

| MARK | ISSUE DATE | DESCRIPTION |
|---|---|---|
| PERMIT | 09/24/04 | PERMIT SET - NOT FOR CONSTRUCTION |

FOR PERMIT ONLY
NOT FOR CONSTRUCTION

Issue Log

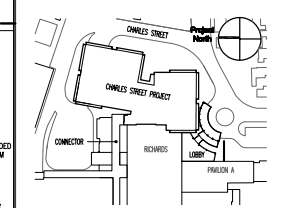


Key Plan


TRO
Architecture
Planning
Engineering
Interior Design
The Fitkin Organization
80 Bridge Street
Newton, MA 02465-2124
617-969-0400


Maine Medical Center
Charles Street Project
Portland, Maine
MMC Project No. 21841

Drawing Title
**HVAC DETAILS**

0" 0 0 0 0

| | | | |
|---|---|---|---|
| Commission No. | 4673 | Date Issued | |
| Scale | NTS | Sheet Number | |
| Drawn By | FWC | | |
| Approved By | CW | | |
| Filename | 4673H600 | | |

**H600**

Copyright © 2004 The Fitkin Organization