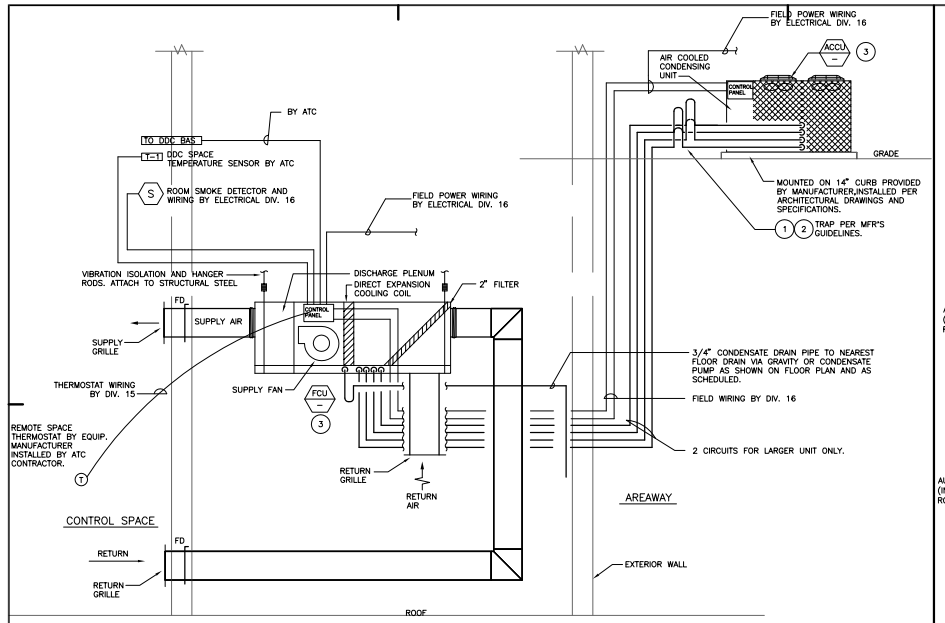

FAN COIL UNIT / ACCU UNIT SPLIT SYSTEM CONTROL SCHEMATIC

SEQUENCE OF OPERATION (FAN COIL UNIT/ AIR COOLED CONDENSING UNIT SPLIT SYSTEM FCU / ACCU)

1. THE ACCU UNIT PACKAGED CONTROLS SHALL CYCLE THE SUPPLY FAN AND ENERGIZE & STAGE THE UNITS AIR COOLED CONDENSING UNIT/DIRECT EXPANSION COOLING COIL TO MAINTAIN 80 F DEG. (ADJ.) SPACE TEMPERATURE.
2. UPON SENSING SMOKE BY THE ROOM SMOKE DETECTOR THE SUPPLY FAN SHALL BE SHUTDOWN AND AN ALARM ISSUED TO THE BUILDING FIRE ALARM SYSTEM FOR FCU AND TO THE DDC/BAS CONTROL SYSTEM.
3. THE ACCU UNIT SHALL HAVE DDC CONTROL INTERFACE TO MONITOR SPACE TEMPERATURE AND ISSUE ALARM ON HIGH TEMP.
4. SEE SCHEDULES AND FLOOR PLANS FOR EQUIPMENT SELECTIONS AND LAYOUTS OF AC-2,3,4 AND 5.
5. DUCTWORK FOR ELECTRIC ROOMS ONLY

SUB-BASEMENT SPLIT SYSTEM CONTROL SCHEMATIC

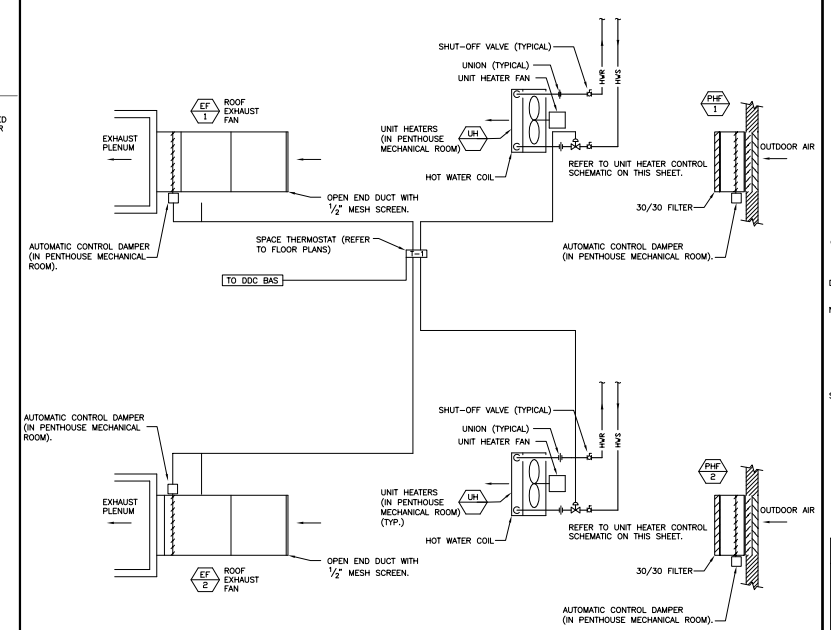

SEQUENCE OF OPERATION - MECHANICAL ROOM HEATING AND VENTILATION

SELF CONTAINED HEATING/COOLING ELECTRIC THERMOSTAT MOUNTED IN MECHANICAL ROOM SHALL CONTROL SPACE TEMPERATURE BETWEEN HEATING AND VENTALATION SETPOINTS. ON A RISE IN TEMPERATURE ABOVE THE SETPOINT, THE THERMOSTAT SHALL OPEN THE INTAKE AND EXHAUST ACD'S AND START THE EXHAUST FAN.

ON A DROP IN SPACE TEMPERATURE BELOW THE HEATING SETPOINT THE FAN SHALL STOP, THE DAMPERS SHALL CLOSE AND THE THERMOSTAT SHALL OPEN THE 2-POSITION UNIT HEATER HOT WATER VALVE. WHEN NO HEATING OR COOLING IS REQUIRED THE EXHAUST FAN AND UNIT HEATER SHALL BE OFF AND THE ASSOCIATED ACD'S SHALL BE CLOSED.

PENTHOUSE MECHANICAL ROOM HEATING AND VENTILATION CONTROL SCHEMATIC

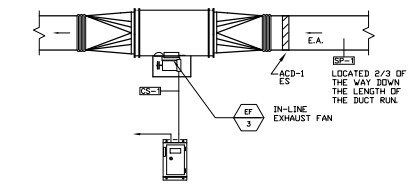

SEQUENCE OF OPERATION - ISOLATION EXHAUST SYSTEMS (EF-03)

GENERAL:

A. EXHAUST FAN SHALL BE ENABLED AND DISABLED FROM THE DDC CONTROL PANEL. THE FAN SHALL TYPICALLY RUN CONTINUOUSLY.

DISABLED MODE:

A. WHEN THE FAN IS DISABLED, THE FAN SHALL BE OFF AND THE MOTORIZED DAMPER (ACD-1) SHALL BE CLOSED.

NORMAL OPERATING MODE:

A. THE FAN SHALL START AND STOP ON COMMAND FROM THE DDC PANEL WHEN THE STARTER "HAND-OFF-AUTO" SWITCH IS IN THE "AUTO" POSITION.

B. THE EXHAUST FAN SHALL BE STARTED AND STOPPED MANUALLY WHEN THE STARTER "HAND-OFF-AUTO" SWITCH IS IN EITHER THE "HAND" OR "OFF" POSITION.

C. WHEN THE FAN IS STARTED, THE MOTORIZED DAMPER (ACD-1) SHALL OPEN. ONCE THE DAMPER HAS BEEN PROVED OPEN VIA THE ASSOCIATED END SWITCH (ES-1), THE FAN SHALL START.

SAFETIES, MONITORING, AND ALARMS:

A. ANYTIME THE FAN IS ENABLED TO OPERATE AND THE CURRENT SENSOR (CS-1) FAILS TO DETECT FAN OPERATION, AN ALARM SHALL BE ISSUED.

B. THE FAN STATUS SHALL BE MONITORED BY THE DDC SYSTEM VIA CURRENT SENSOR (CS-1).

INPUT/OUTPUT SUMMARY TABLE-GENERAL EXHAUST FANS

DESCRIPTION	INPUTS ANALOG: CURRENT	AIR FLOW INDICATOR	DAMPER POSITION	HOT WATER VALVE POSITION	VARIABLE VALVE POSITION	SPACE TEMPERATURE	LVG AIR TEMPERATURE	FILTER PRESSURE DROP	INPUTS BINARY: STARTER STATUS	SWITCH CLOSURE	SWITCH POSITION	DUCT SWITCH	SPACE SELECTION	OUTPUTS ANALOG: MODULATE DAMPER	MODULATE HOT WATER VALVE	MODULATE CHWATER VALVE	OUTPUTS BINARY: CONTROL RELAY	CONTROL	2-POSITION DAMPER MOD.	SMOKE INTERLOCK	ALARMS: HIGH LIMIT (PRESS)	HIGH LIMIT (TEMP)	LOSS OF STATES	LOW LIMIT (TEMP)	LOW PRESSURE ALARM	FEATURES: SCHEDULED START/STOP	SUMMER/WINTER RESET/SETP	SUMMER START (ADJUST)	DAYS TO LIVE	DYNAMIC LIMITING	OCCUPANCY OVRD (0.5)	OCCUPATION DELAY	SUMMER START DELAY	N.W. RISER W.O.A. TEMPERATURE	REMOTE READ/RESET	COLOR GRAPHICS	PANEL CONSOLE	TREND LOG
EXHAUST FAN (EF-3) (ACD-1) (CS-1)	●												●																										●		●
DUCT STATIC PRESSURE SP-1					●																			●	●														●		●

General Notes:

MISC. EXHAUST SYSTEMS CONTROL SCHEMATIC

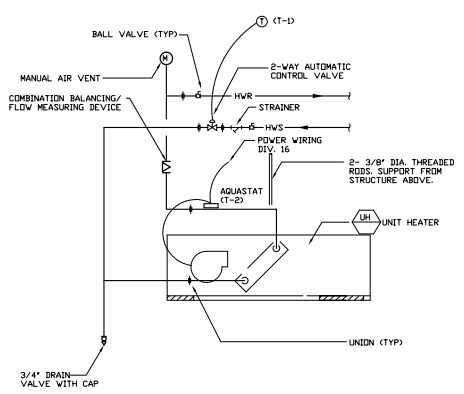

SEQUENCE OF OPERATION (HOT WATER CABINET UNIT HEATERS)

1. UPON A DROP IN TEMPERATURE BELOW THE SETPOINT, AS SENSED BY LOCAL THERMOSTAT, (T-1) THE CONTROL VALVE SHALL MODULATE OPEN AND THE UNIT HEATER FAN SHALL BE ENERGIZED TO MAINTAIN SPACE TEMPERATURE SETPOINT. AQUASTAT (T-2) SHALL PREVENT THE OPERATION OF THE UNIT HEATER SUPPLY FAN WHEN HOT WATER SUPPLY TEMPERATURE IS BELOW 120 F (ADJUSTABLE).

HOT WATER CABINET UNIT HEATER CONTROL SCHEMATIC

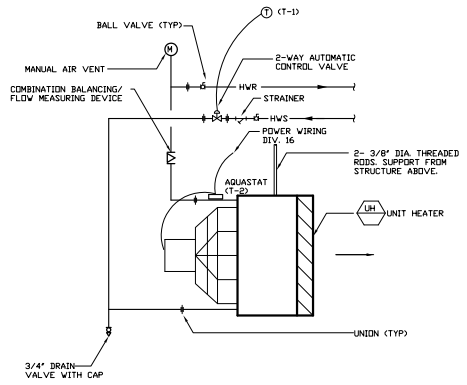

SEQUENCE OF OPERATION (HOT WATER UNIT HEATERS)

1. UPON A DROP IN TEMPERATURE BELOW THE SETPOINT, AS SENSED BY LOCAL THERMOSTAT, (T-1) THE CONTROL VALVE SHALL MODULATE OPEN AND THE UNIT HEATER FAN SHALL BE ENERGIZED TO MAINTAIN SPACE TEMPERATURE SETPOINT. AQUASTAT (T-2) SHALL PREVENT THE OPERATION OF THE UNIT HEATER SUPPLY FAN WHEN HOT WATER SUPPLY TEMPERATURE IS BELOW 120 F (ADJUSTABLE).

HOT WATER UNIT HEATER CONTROL SCHEMATIC

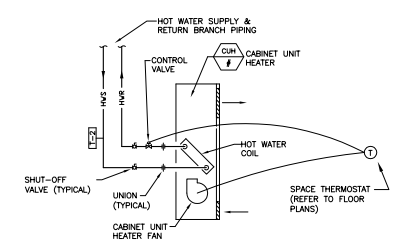

SEQUENCE OF OPERATION - CABINET UNIT HEATERS

UPON A DROP IN TEMPERATURE BELOW THE SETPOINT, AS SENSED BY THE LOCAL OR FACTORY MOUNTED THERMOSTAT THE CABINET UNIT HEATER HOT WATER CONTROL VALVE SHALL OPEN AND THE FAN SHALL BE ENERGIZED UNTIL SPACE TEMPERATURE SETPOINT IS SATISFIED. AQUASTAT (T-2) SHALL PREVENT THE OPERATION OF THE CABINET UNIT HEATER SUPPLY FAN WHEN HOT WATER SUPPLY TEMPERATURE IS BELOW 120 F.

NOTE: SEQUENCE IS TYPICAL TO BOTH HORIZONTAL AND VERTICAL UNITS.

HOT WATER CABINET UNIT HEATER

DDC ALARM POINTS FOR AUTOMATIC TEMPERATURE CONTROLS AIR COMPRESSOR

ALARMS SHALL BE SENT TO THE DDC OPERATOR WORKSTATION UPON THE FOLLOWING EVENT BEING SENSED.

1. PRESURE EXCEEDING OR FALLING BELOW SETPOINT FOR A PERIOD GREATER THAN 5 MINUTES AS SENSED BY PRESSURE SENSORS P-1 AND P-2.

2. RELATIVE HUMIDITY OF AIR LEAVING THE AIR DRYER GREATER THAN 90% AS SENSED BY DEWPOINT MONITOR DEW-1.

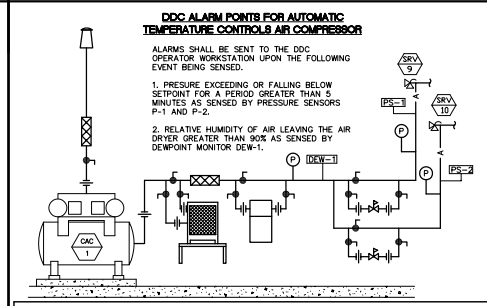

INPUT/OUTPUT SUMMARY TABLE - ATC AIR COMPRESSOR

DESCRIPTION	INPUTS ANALOG: AIR PRESSURE	AIR FLOW	DAMPER POSITION	HOT WATER VALVE POSITION	VARIABLE VALVE POSITION	SPACE TEMPERATURE	LVG AIR TEMPERATURE	FILTER PRESSURE DROP	INPUTS BINARY: STARTER STATUS	SWITCH CLOSURE	SWITCH POSITION	DUCT SWITCH	SPACE SELECTION	OUTPUTS ANALOG: MODULATE DAMPER	MODULATE HOT WATER VALVE	MODULATE CHWATER VALVE	OUTPUTS BINARY: CONTROL RELAY	CONTROL	2-POSITION DAMPER MOD.	SMOKE INTERLOCK	ALARMS: HIGH LIMIT (PRESS)	HIGH LIMIT (TEMP)	LOSS OF STATES	LOW LIMIT (TEMP)	LOW PRESSURE ALARM	FEATURES: SCHEDULED START/STOP	SUMMER/WINTER RESET/SETP	SUMMER START (ADJUST)	DAYS TO LIVE	DYNAMIC LIMITING	OCCUPANCY OVRD (0.5)	OCCUPATION DELAY	SUMMER START DELAY	N.W. RISER W.O.A. TEMPERATURE	REMOTE READ/RESET	COLOR GRAPHICS	PANEL CONSOLE	TREND LOG
PRESSURE SENSORS PS-1 AND PS-2	●																				●																				
DEPOINT MONITOR DEW-1		●																				●																	●		

CONTROL AIR COMPRESSOR

SEQUENCE OF OPERATION (ROOF TOP UNITS)

1. THE ROOFTOP UNIT'S PACKAGED CONTROLS SHALL CYCLE THE SUPPLY FAN AND ENERGIZE & STAGE THE UNIT'S AIR COOLED CONDENSING UNIT/DIRECT EXPANSION COOLING COIL AND ELECTRIC HEATING COIL TO MAINTAIN 80°F DEG. (ADJ.) SPACE TEMPERATURE AS SENSED BY THE REMOTE MOUNTED THERMOSTAT PROVIDED BY THE UNIT MANUFACTURER.

2. THE UNIT SHALL BE EQUIPPED WITH A DRY BULB ECONOMIZIER CYCLE THAT SHALL MODULATE THE OUTDOOR AIR DAMPERS TO MAINTAIN SPACE TEMPERATURE WHENEVER THE OUTDOOR AIR DRY BULB TEMP IS EQUAL TO OR GREATER THAN 50°F.

3. UPON SENSING SMOKE BY THE DUCT SMOKE DETECTOR THE SUPPLY FAN SHALL BE SHUTDOWN AND AN ALARM ISSUED TO THE BUILDING FIRE ALARM SYSTEM AND TO THE DDC/BAS CONTROL SYSTEM.

4. THE BUILDING DDC CONTROLS SYSTEM SHALL MONITOR SPACE TEMPERATURE VIA TEMPERATURE SENSOR T-1 AND ISSUE ALARMS ON LOW 42°F/HIGH 90°F TEMP.

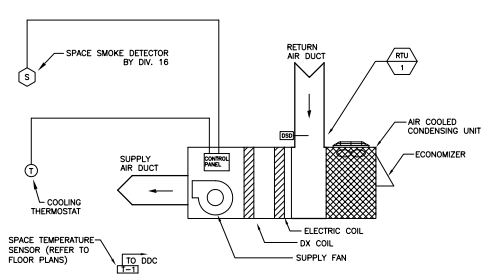

ELEVATOR MACHINE ROOM HEAT PUMP CONTROL SCHEMATIC

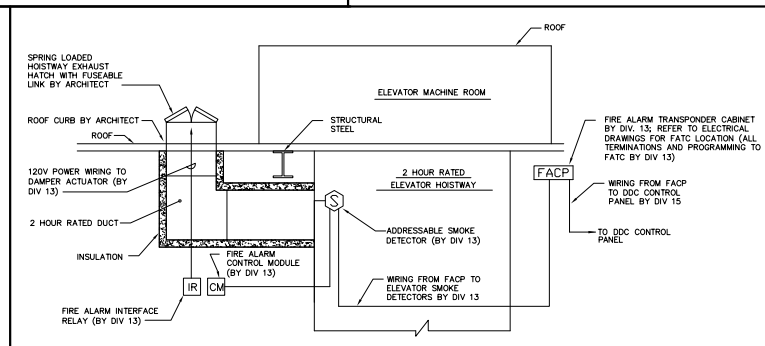

INPUT/OUTPUT SUMMARY TABLE-ELEVATOR VENT DAMPERS

DESCRIPTION	INPUTS ANALOG: SPACE TEMPERATURE	AIR FLOW	DAMPER POSITION	HOT WATER VALVE POSITION	VARIABLE VALVE POSITION	SPACE TEMPERATURE	LVG AIR TEMPERATURE	FILTER PRESSURE DROP	INPUTS BINARY: STARTER STATUS	SWITCH CLOSURE	SWITCH POSITION	DUCT SWITCH	SPACE SELECTION	OUTPUTS ANALOG: MODULATE DAMPER	MODULATE HOT WATER VALVE	MODULATE CHWATER VALVE	OUTPUTS BINARY: CONTROL RELAY	CONTROL	2-POSITION DAMPER MOD.	SMOKE INTERLOCK	ALARMS: HIGH LIMIT (TEMP)	HIGH LIMIT (PRESS)	LOW LIMIT (TEMP)	ELEVATOR VENT DAMPER ALARM	FEATURES: SCHEDULED START/STOP	SUMMER/WINTER RESET/SETP	SUMMER START (ADJUST)	DAYS TO LIVE	DYNAMIC LIMITING	OCCUPANCY OVRD (0.5)	OCCUPATION DELAY	SUMMER START DELAY	N.W. RISER W.O.A. TEMPERATURE	REMOTE READ/RESET	COLOR GRAPHICS	PANEL CONSOLE	TREND LOG
ELEVATOR VENT DAMPERS (EA DAMPER)																								●																	

SEQUENCE OF OPERATION ELEVATOR MACHINE ROOM VENT DAMPER

THE ELEVATOR MACHINE ROOM VENT DAMPER SHALL OPEN WHEN PROGRAMMED AREA SMOKE DETECTORS SENSE THE PRESENCE OF SMOKE IN THE ELEVATOR MACHINE ROOM.

THE FIRE ALARM TRANSPONDER CABINET SHALL INITIATE AND ALARM TO THE DDC CONTROL PANEL VIA ITS COMMUNICATION LOOP INDICATING THE ELEVATOR MACHINE ROOM VENT DAMPERS ARE OPEN.

ELEVATOR HOISTWAY VENT CONTROL SCHEMATIC

MARK	ISSUE DATE	DESCRIPTION
PERMIT	09/24/04	PERMIT SET - NOT FOR CONSTRUCTION

FOR PERMIT ONLY
NOT FOR CONSTRUCTION

Issue Log

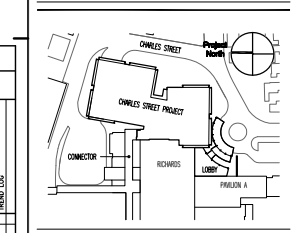

Key Plan

TRO
Architecture
Planning
Engineering
Interior Design
The Fitchlin Organization
50 Bridge Street
Newton, MA 02465-2124
617-969-0400

Maine Medical Center
Charles Street Project
Portland, Maine
MMC Project No. 21841

Drawing Title
HVAC SYSTEMS SEQUENCE OF OPERATION

0' 0 0 0 0

Commission No.	4673	Date Issued	
Scale	NTS	Sheet Number	
Drawn By	FMC		
Approved By	CM		H506
Filename	4673H506		

Copyright © 2004 The Fitchlin Organization