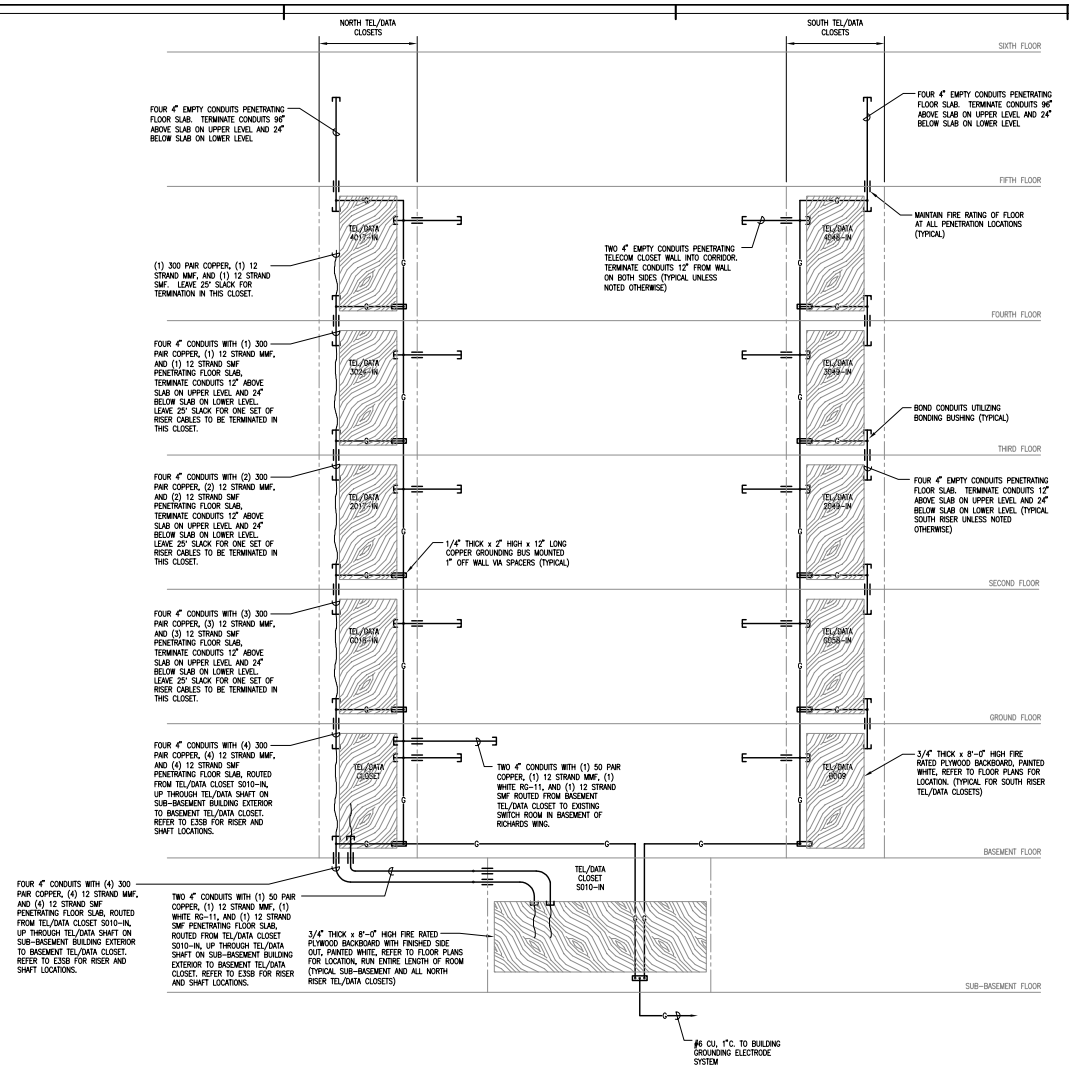

1 TELECOMMUNICATION CONDUIT DISTRIBUTION SYSTEM
SCALE: NONE

NOTES:

1. ALL CONDUITS SHALL BE PROVIDED WITH BUSHINGS AND A NYLON PULLSTRING.

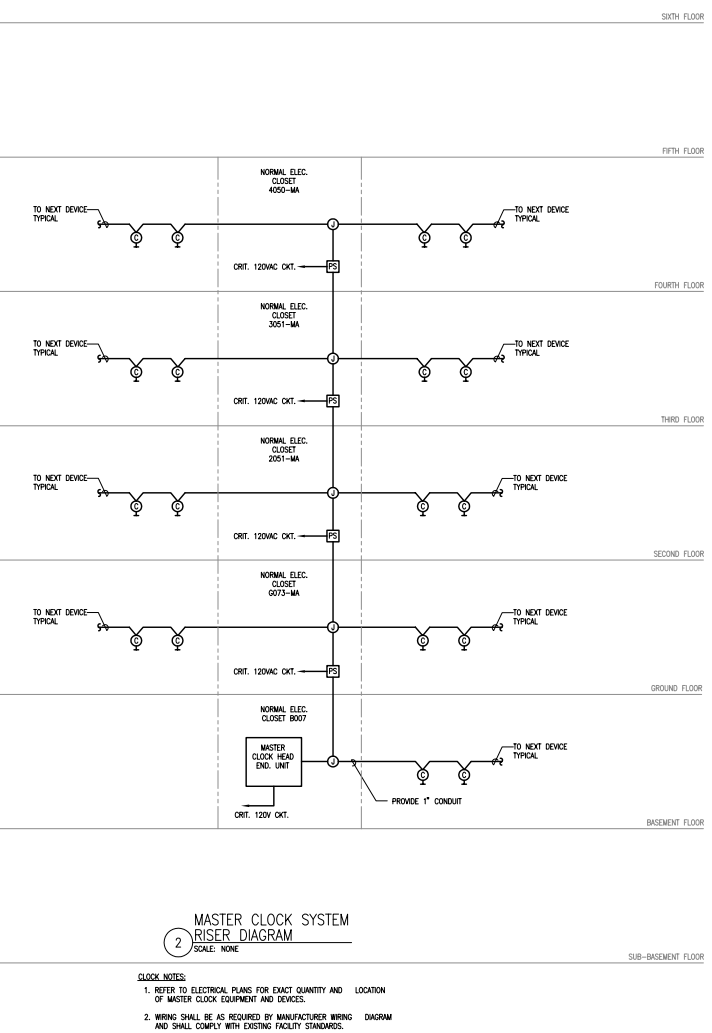

2 MASTER CLOCK SYSTEM RISER DIAGRAM
SCALE: NONE

CLOCK NOTES:

1. REFER TO ELECTRICAL PLANS FOR EXACT QUANTITY AND LOCATION OF MASTER CLOCK EQUIPMENT AND DEVICES.
2. WIRING SHALL BE AS REQUIRED BY MANUFACTURER WIRING DIAGRAM AND SHALL COMPLY WITH EXISTING FACILITY STANDARDS.
3. ELECTRICAL CONTRACTOR SHALL PROVIDE NECESSARY EQUIPMENT, LABOR AND PROGRAMMING OF MASTER CLOCK HEAD END TO ACCOMMODATE ALL WIRING AND EQUIPMENT FOR COMPLETE SYSTEM OPERABILITY.

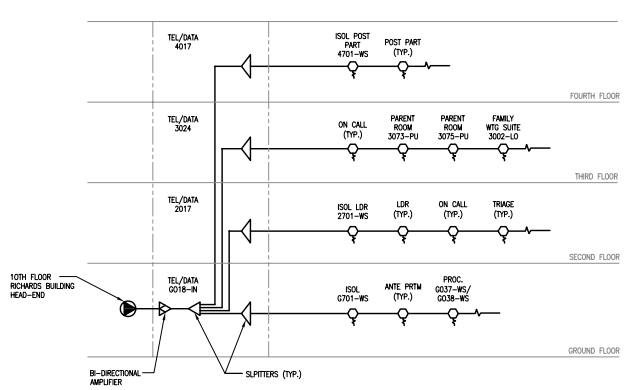

3 ITV RF-NETWORK RISER
SCALE: NONE

ITV NOTES

1. ITV DEVICES SHOWN ARE PROVIDED BY OTHERS.
2. WIRING SHALL BE WHITE RG-11 FOR RISERS, BLACK RG-6 FOR HORIZONTAL RUNS.

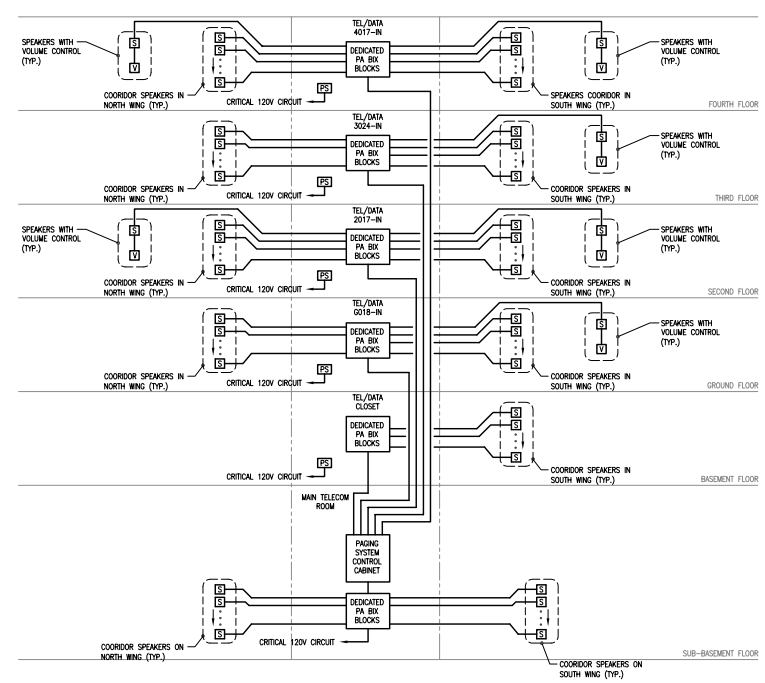

4 PUBLIC ADDRESS SYSTEM RISER
SCALE: NONE

PUBLIC ADDRESS NOTES:

1. REFER TO ELECTRIC PLANS FOR EXACT QUANTITY AND LOCATION OF PUBLIC ADDRESS DEVICES.
2. PUBLIC ADDRESS SYSTEM WIRING SHALL BE AS REQUIRED BY MANUFACTURER'S WIRING DIAGRAM.
3. SPEAKERS SHALL BE PROVIDED WITH INTEGRAL VOLUME CONTROL UNIT. LOCATE ABOVE VOLUME CONTROL UNITS AS SPECIFIED.
4. ONE 4 PAIR CAT 3 GRAY UTP PLENUM RATED CABLE SHALL BE HOME RUN BACK TO TELECOM CLOSET FOR EACH SPEAKER.
5. PROVIDE SUFFICIENT POWER SUPPLIES TO DRIVE QUANTITY OF SPEAKERS SHOWN ON EACH FLOOR.

General Notes:

MARK	ISSUE DATE	DESCRIPTION
PERMIT	09/24/04	PERMIT SET – NOT FOR CONSTRUCTION

FOR PERMIT ONLY
NOT FOR CONSTRUCTION

Issue Log

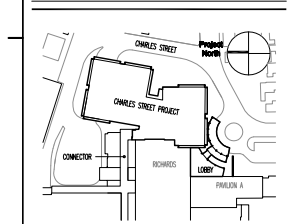

Key Plan

TRO
Architecture
Planning
Engineering
Interior Design
The Ritchie Organization
80 Bridge Street
Newton, MA 02465-1134
617-969-9400

Maine Medical Center
Charles Street Project
Portland, Maine MMC Project No. 21841

Drawing Title
ELECTRICAL LOW VOLTAGE RISER DIAGRAMS

0' 0 0 0 0

Commission No.	4673	Date Issued	
Scale	NONE	Sheet Number	
Drawn By	K.G.		
Approved By	D.S.		
Filename	4673E632L.DD		

E632

Copyright © 2009 The Ritchie Organization