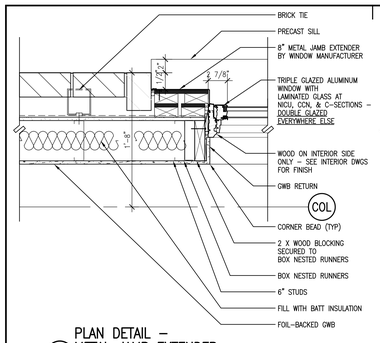

A1 PLAN DETAIL – METAL JAMB EXTENDER
SCALE: 3/4" = 1'-0"

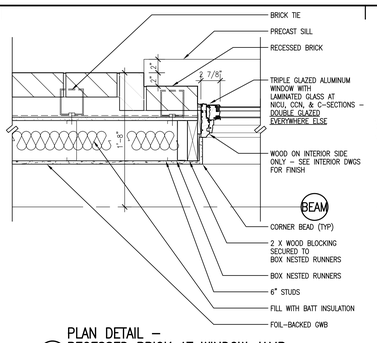

B1 PLAN DETAIL – RECESSED BRICK AT WINDOW JAMB
SCALE: 3/4" = 1'-0"

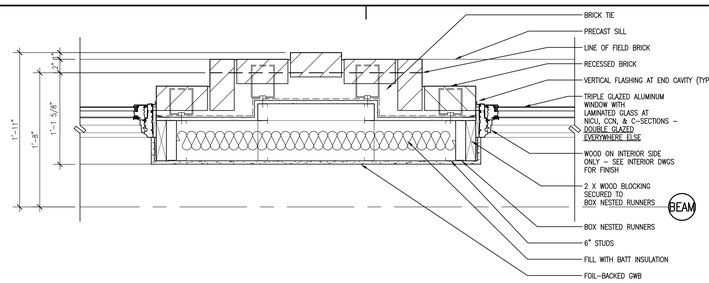

C1 PLAN DETAIL – BRICK PILLASTER AT WINDOW JAMB
SCALE: 3/4" = 1'-0"

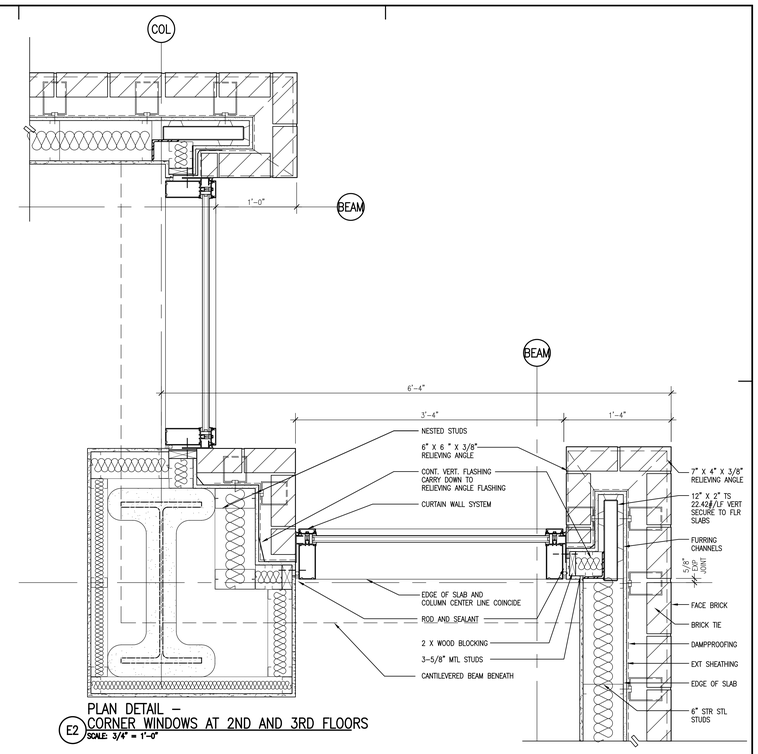

E2 PLAN DETAIL – CORNER WINDOWS AT 2ND AND 3RD FLOORS
SCALE: 3/4" = 1'-0"

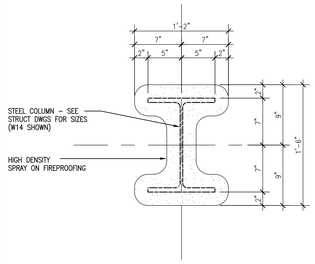

A2 PLAN DETAIL AT PENTHOUSE COLUMN ENCLOSURE
SCALE: 3/4" = 1'-0"

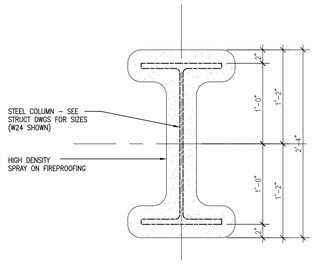

A3 PLAN DETAIL AT PENTHOUSE COLUMN ENCLOSURE
SCALE: 3/4" = 1'-0"

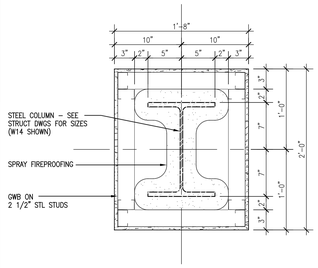

A4 PLAN DETAIL AT COLUMN ENCLOSURE
SCALE: 3/4" = 1'-0"

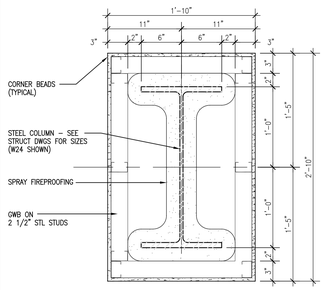

A5 PLAN DETAIL AT COLUMN ENCLOSURE
SCALE: 3/4" = 1'-0"

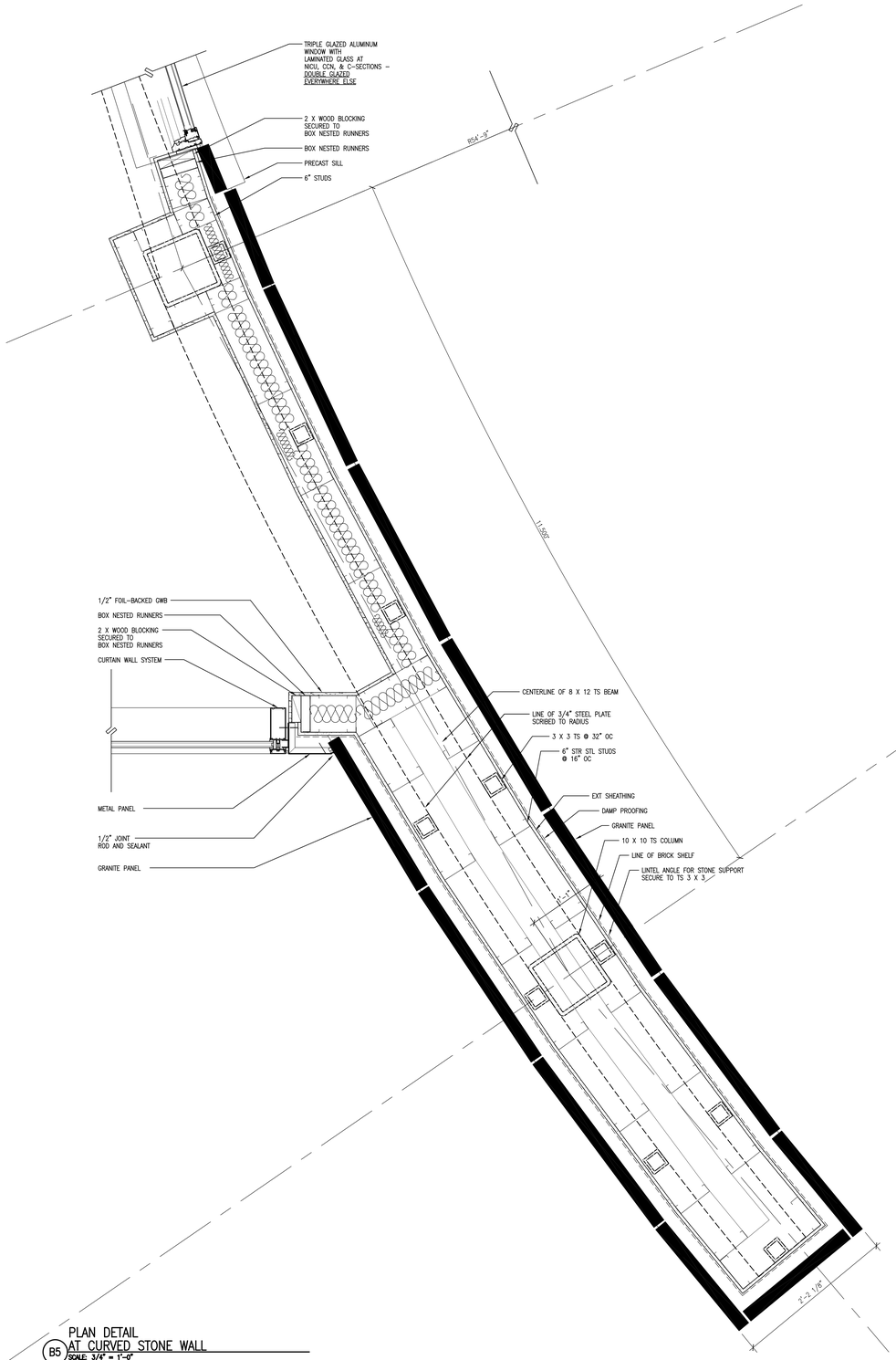

B5 PLAN DETAIL AT CURVED STONE WALL
SCALE: 3/4" = 1'-0"

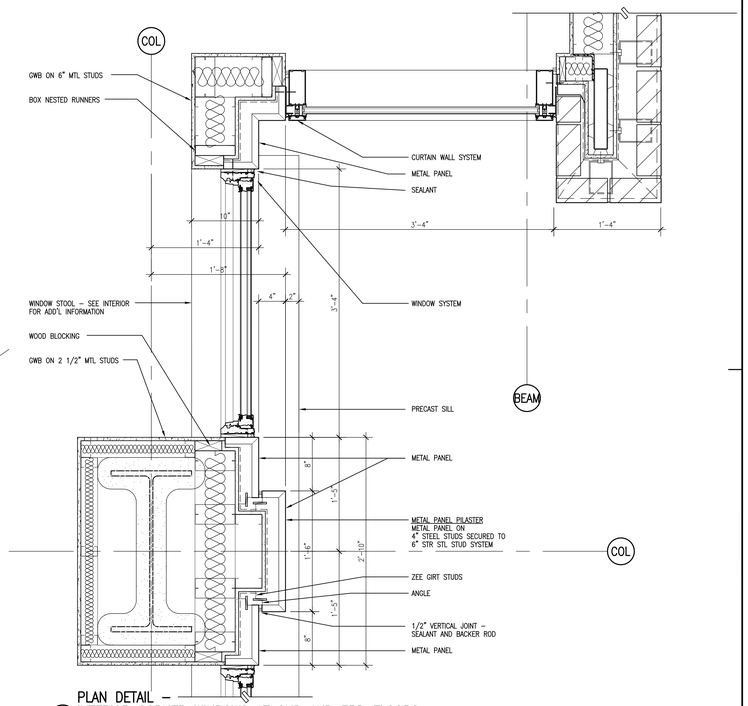

E4 PLAN DETAIL – INTERIOR CORNER WINDOWS AT 2ND AND 3RD FLOORS
SCALE: 3/4" = 1'-0"

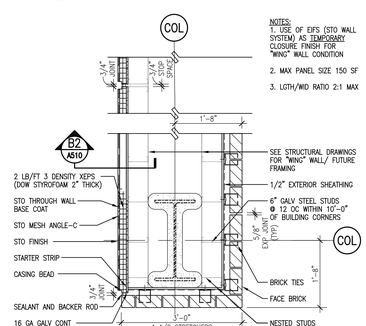

NOTES:
1. USE OF EIFS (STO WALL SYSTEM) AS TEMPORARY CLOSURE FINISH FOR "WING" WALL CONDITION
2. MAX PANEL SIZE 150 SF
3. LGTH/WID RATIO 2:1 MAX

E5 PLAN DETAIL – SECTION AT "WING" WALL
SCALE: 1 1/2" = 1'-0"

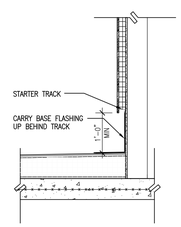

F5 SECTION DETAIL – ROOF TO "WING" WALL TRANSITION
SCALE: 1 1/2" = 1'-0"

General Notes:

MARK	ISSUE DATE	DESCRIPTION
PERMIT	09/24/04	PERMIT SET – NOT FOR CONSTRUCTION

FOR PERMIT ONLY
NOT FOR CONSTRUCTION

Issue Log

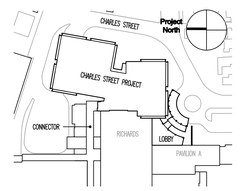

Key Plan

TRO
Architecture
Planning
Engineering
Interior Design
The Ritchie Organization
60 Bridge Street
Newton, MA 02465-1134
617-969-9400

Maine Medical Center
Charles Street Project
Portland, Maine MMC Project No. 21841

Drawing Title
MISC. DETAILS III

0' 0 0 0 0

Commission No.	4673	Date Issued	
Scale	AS NOTED	Sheet Number	
Drawn By	JJV		
Approved By	RA		
Filename	4673A517.dwg		

A517

Copyright © 2004 The Ritchie Organization