ABBREVIATIONS

A

A	AMPERE
AF	AMPERE FRAME (CIRCUIT BREAKER RATING)
AFF	ABOVE FINISHED FLOOR
AFG	ABOVE FINISHED GRADE
AHU	AIR HANDLING UNIT
AIC	AMPERE INTERRUPTING CAPACITY
AL	ALUMINUM
AM	AMMETER
AMP	AMPERE
ANN	ANNUNCIATOR
ANSI	AMERICAN NATIONAL STANDARDS INSTITUTE
ARCH	ARCHITECTURAL
AS	AMMETER SELECTOR
AT	AMPERE TRIP
ATC	AUTOMATIC TEMPERATURE CONTROL
ATS	AUTOMATIC TRANSFER SWITCH
AWG	AMERICAN WIRE GAUGE

B

BAS	BUILDING AUTOMATION SYSTEM
BD	BOARD
BKBD	BACKBOARD
BKR	CIRCUIT BREAKER
BLDG	BUILDING
BWE	BAKED WHITE ENAMEL

C

C	CONDUIT
CAB	CABINET
CAT	CATALOG
C.B.	CIRCUIT BREAKER
CH	CABINET HEATER
CKT	CIRCUIT
CKT	CIRCUIT
CLG	CEILING
COL	COLUMN
CNTL	CONTROLLER
COM	COMMUNICATION
COMB	COMBINATION
CON	CONNECTION
CP	CAP
CS	CONTROL SWITCH
CT	CABLE TRAY/CURRENT TRANSFORMER
CU	COPPER

D

D	DEMAND
DIA	DIAMETER
DWG	DWG

E

E	WIRED ON EMERGENCY CIRCUIT
EA	EACH
EC	EMPTY CONDUIT
EF	EXHAUST FAN
ELEC	ELECTRICAL
ELEV	ELEVATOR
EM	EMERGENCY
EMT	ELECTRICAL METALLIC TUBING
EO	ELECTRICALLY OPERATED
EQUIP	EQUIPMENT
EY	EXIT LIGHT
EXH	EXHAUST
EXP	EXPLOSION PROOF

F

F	FLUSH
FA	FIRE ALARM
FACP	FIRE ALARM UNIT
FDR	FEEDER
FI	FILM ILLUMINATOR
FLUOR	FLUORESCENT
FPU	FIELD PROCESSING UNIT
FS	FUSED SWITCH
FT	FEET

G

G	GROUND
GA	GAUGE
GEN	GENERATOR
GF	GROUND FAULT
GFCI	GROUND FAULT CIRCUIT INTERRUPTING
GFI	GROUND FAULT INTERRUPTING
GND	GROUND

H

HH	HANDHOLE
HID	HIGH INTENSITY DISCHARGE
HOA	HAND OFF AUTO
HP	HORSEPOWER
HTR	HEATER

I

IC	INTERRUPTING CAPACITY
INC	INCANDESCENT

J

JB	JUNCTION BOX

K

KCMIL	ONE THOUSAND CIRCULAR MILS
KV	KILOVOLT
KVA	KILOVOLT AMPERE
KVAR	KILOVOLT AMPERE REACTIVE
KW	KILOWATT
KWH	KILOWATT HOUR

L

LA	LIGHTNING ARRESTER
LS	LIFE SAFETY
LTG	LIGHTING

M

MAX	MAXIMUM
MCB	MAIN CIRCUIT BREAKER
MCC	MOTOR CONTROL CENTER
MCP	MOTOR CIRCUIT PROTECTOR
MDP	MAIN DISTRIBUTION PANEL
MECH	MECHANICAL
MFS	MAIN FUSE SWITCH
MH	MANHOLE
MIN	MINIMUM
MISC	MISCELLANEOUS
ML	MATCH LINE
MLO	MAIN LUGS ONLY
MTD	MOUNTED
MTS	MANUAL TRANSFER SWITCH
MV	MEDIUM VOLTAGE

N

NA	NOT APPLICABLE
NC	NORMALLY CLOSED
NEC	NATIONAL ELECTRIC CODE
NEMA	NATIONAL ELECTRIC MANUFACTURES ASSOCIATION
NFPA	NATIONAL FIRE PROTECTION ASSOCIATION
NIC	NOT IN CONTRACT
NL	NIGHTLIGHT
NM	NURSE MASTER
NO	NORMALLY OPEN
NTS	NOT TO SCALE

O

OCP	OVERCURRENT PROTECTION DEVICE
OPER	OPERATOR

P

P	POLE
PT	POTENTIAL TRANSFORMER
PVC	POLYVINYL CHLORIDE

R

R	RISERS
RGS	RIGID GALVANIZED STEEL

S

S	SURFACE
SCR	SHORT CIRCUIT INTERRUPTING RATING
SP	SPARE
SW	SWITCH

T

TEL	TELEPHONE

U

UG	UNDERGROUND
UNO	UNLESS NOTED OTHERWISE

V

V	VOLT

W

W	WATT
WP	WEATHERPROOF

X

XFMR	TRANSFORMER

Y

Y	WYE

DRAWING NOTES AND DESIGNATIONS

- KEY NOTES
- EQUIPMENT DESIGNATIONS
- ROOM NUMBERS
- FEEDER AND/OR BRANCH CIRCUIT NUMBER
- REVISION NOTATION (+ INDICATES NUMBER)

DEMOLITION LEGEND

- "X" EXISTING ELECTRICAL DEVICE TO BE REMOVED
- "XM" EXISTING ELECTRICAL DEVICE TO BE MAINTAINED
- "XR" EXISTING ELECTRICAL DEVICE TO BE REMOVED AND RELOCATED
- "XL" EXISTING ELECTRICAL DEVICE RELOCATED

DRAWING LIST

ELECTRICAL

E001 ELECTRICAL LEGEND, GENERAL NOTES AND ABBREVIATIONS
E010 ELECTRICAL SITE DEMOLITION PLAN
E040 ELECTRICAL SITE DISTRIBUTION PLAN
E501 ELECTRICAL PARTIAL POWER PLANS
E700 ELECTRICAL SCHEDULES
E800 ELECTRICAL DETAILS

General Notes:

GENERAL NOTES:

1. THIS IS A STANDARD SYMBOL LIST. ALL DEVICE SYMBOLS AND ABBREVIATIONS MAY NOT NECESSARILY APPEAR ON THE FLOOR PLANS OR DETAIL SHEET. ONLY THOSE SYMBOLS INDICATED ON THE FLOOR PLANS ARE USED AND OTHERS SHOULD BE DISREGARDED.
2. MOUNTING HEIGHTS SHALL BE AS INDICATED ON MOUNTING HEIGHT DETAIL (BELOW)
3. CONTRACTOR SHALL VERIFY ALL DOOR SWINGS BEFORE INSTALLING SWITCH BOXES.
4. FOR EXACT LOCATION OF LIGHTING FIXTURES SEE REFLECTED CEILING PLAN DRAWINGS.
5. FOR MOUNTING HEIGHT OF UNDER-COUNTER LIGHTING FIXTURES AND OTHER TASK LIGHTING, REFER TO ARCHITECTURAL DRAWINGS.
6. ELECTRICAL CONTRACTOR IS TO COORDINATE THE EXACT LOCATION OF LIGHTING FIXTURES IN MECHANICAL AND STORAGE AREAS WITH OTHER TRADES.
7. FOR EXACT LOCATION AND RATING OF MECHANICAL EQUIPMENT (AC UNITS, FANS, PUMPS, ETC.) REFER TO RESPECTIVE TRADES DRAWINGS.
8. THE ELECTRICAL CONTRACTOR SHALL PROVIDE EXPANSION FITTINGS IN ALL RACEWAYS CROSSING CONSTRUCTION OR EXPANSION JOINTS.
9. ALL WIRE SHALL BE 600V RATED COPPER. WIRE SIZE #14 THRU #3/0 SHALL BE DUAL RATED TYPE THHN/THWN, #4/0 AND LARGER SHALL BE TYPE THHN/THWN OR XHHW. WIRE SIZE #14 THRU #10 SHALL BE SOLID, #8 AND LARGER SHALL BE STRANDED. ALL POWER WIRING FOR MECHANICAL EQUIPMENT SHALL BE A MINIMUM OF THREE (3) #10's. ALL CONTROL WIRING SHALL BE A MINIMUM OF TWO (2) #14's. ALL HOMERUNS IN EXCESS OF 100 FEET FROM SOURCE SHALL BE A MINIMUM OF THREE (3) #10's. ALL OTHER WIRING SHALL BE A MINIMUM OF THREE (3) #12's.
10. ALL CURRENT CARRYING MATERIAL USED SHALL BE COPPER, INCLUDING PANELBOARD BUS MATERIALS AND TRANSFORMER WINDINGS.
11. FURNISH GROUNDING/BONDING BUSHINGS ONTO ALL CONDUIT ENTERING/LEAVING BOXES.
12. ALL GROUND CONDUCTORS SHALL BE GREEN, ISOLATED GROUND CONDUCTORS SHALL BE GREEN/YELLOW STRIPPED, AND NEUTRAL CONDUCTORS SHALL BE WHITE.
13. CONTRACTOR SHALL PROVIDE ALL CONDUIT, WIRE, AND LABOR AS REQUIRED BY THE FIRE ALARM MANUFACTURER TO PROPERLY CONNECT THE DEVICES INDICATED ON THE DRAWINGS. FIRE ALARM SHOP DRAWING SUBMITTAL SHALL INCLUDE A RISER DIAGRAM AND COMPLETED BATTERY CALCULATIONS.

ELECTRICAL LEGEND

CONVENIENCE OUTLET (HOSPITAL GRADE) – REFER TO ARCHITECTURAL ELEVATIONS

- 12 STANDARD RECEPTACLE DESIGNATION: "12" INDICATES BRANCH CIRCUIT NUMBER
- NEMA 5-20R DUPLEX RECEPTACLE (NORMAL CIRCUIT)
- NEMA 5-20R DUPLEX RECEPTACLE (EMERGENCY CRITICAL CIRCUIT)
- W NEMA 5-20R DUPLEX RECEPTACLE – 9" BELOW FINISHED CEILING – U.N.O.
- TP NEMA 5-20R DUPLEX RECEPTACLE – TAMPER PROOF
- NEMA 5-20R DUPLEX RECEPTACLE – GROUND FAULT INTERRUPTING
- NEMA 5-20R DUPLEX RECEPTACLE – GROUND FAULT INTERRUPTING (EMERGENCY CRITICAL CIRCUIT)
- C NEMA 5-20R DUPLEX RECEPTACLE – MOUNTED 6" ABOVE COUNTER BACKSPLASH – U.N.O.
- WP NEMA 5-20R DUPLEX RECEPTACLE – WEATHERPROOF
- ISO NEMA 5-20R DUPLEX RECEPTACLE – ISOLATED GROUND
- NEMA 5-20R DOUBLE DUPLEX RECEPTACLE (NORMAL CIRCUIT)
- NEMA 5-20R DOUBLE DUPLEX RECEPTACLE (EMERGENCY CRITICAL CIRCUIT)
- NEMA 5-20R SINGLE RECEPTACLE (EMERGENCY CRITICAL CIRCUIT)
- NEMA 5-20R SINGLE RECEPTACLE
- NEMA L5-20R TWIST LOCK SINGLE RECEPTACLE (NORMAL CIRCUIT)
- NEMA L5-20R TWIST LOCK SINGLE RECEPTACLE (EMERGENCY CRITICAL CIRCUIT)
- SPECIAL PURPOSE WIRING DEVICE, NEMA CONFIGURATION AS INDICATED
- FLUSH FLOOR BOX ASSEMBLY WITH INDICATED DEVICE
- FLUSH FLOOR BOX ASSEMBLY WITH INDICATED DEVICE (EMERGENCY CRITICAL CIRCUIT)
- PP POWER POLE
- SURFACE METAL RACEWAY WITH DEVICES INDICATED ON PLAN
- MULTI-OUTLET ASSEMBLY

MISCELLANEOUS

- LIGHTING AND/OR POWER PANELBOARD
- EXISTING LIGHTING AND/OR POWER PANELBOARD
- JUNCTION BOX
- LGA LOCAL GAS ALARM PANEL CONNECTION
- MGA MASTER GAS ALARM PANEL CONNECTION
- FI FILM ILLUMINATOR CONNECTION
- EWC ELECTRIC WATER COOLER CONNECTION
- FLOOR JUNCTION BOX
- 3 GROUND JACK – NUMBER INDICATES QUANTY
- MOTOR CONNECTION
- DISCONNECT SWITCH – FUSED
- DISCONNECT SWITCH – UNFUSED
- PB PULL BOX
- T DRY-TYPE TRANSFORMER
- MOTOR STARTER AND/OR CONTROL SWITCH
- COMBINATION DISCONNECT SWITCH AND MOTOR STARTER WITH PILOT WITH HAND-OFF-AUTO SELECTOR SWITCH
- CB ENCLOSED SEPARATELY MOUNTED CIRCUIT BREAKER
- GGA REMOTE GENERATOR ANNUNCIATOR PANEL
- TC TIME CLOCK
- EP EMERGENCY SUPERVISORY RELAY
- CT LIGHTING CONTACTOR (i.e. ASCO 917)
- PP PUSH PLATE

CONDUIT RUNS

- LGE-1 HOMERUN TO PANELBOARD "LGE" CIRCUIT NO.'S 1 AND 3 SLASH LINES INDICATE NO. OF CONDUCTORS; NO SLASH LINES INDICATE (2) CONDUCTORS. REQUIRED GROUND CONDUCTORS ARE NOT INDICATED. MINIMUM SIZE NO. 12AWG AND 3/4" CONDUIT UNLESS OTHERWISE INDICATED
- TURNING UP
- TURNING DOWN
- XM EXISTING BRANCH CIRCUIT WIRING TO BE MAINTAINED
- XM EXISTING BRANCH CIRCUIT HOMERUN TO BE MAINTAINED

LIGHTING FIXTURE AND OUTLET BOX – LETTER REFERS TO FIXTURE SCHEDULE

- A STANDARD LIGHTING FIXTURE DESIGNATION: "FN" INDICATES LIGHTING FIXTURE TYPE (REFER TO LIGHTING FIXTURE SCHEDULE); "5" INDICATES BRANCH CIRCUIT NUMBER; "b" INDICATES SWITCH CONTROL
- FLUORESCENT LIGHTING FIXTURE (NORMAL CIRCUIT)
- FLUORESCENT LIGHTING FIXTURE (EMERGENCY LIFE SAFETY CIRCUIT)
- FLUORESCENT LIGHTING FIXTURE (EMERGENCY CRITICAL CIRCUIT)
- RECESSED LIGHTING FIXTURE (NORMAL CIRCUIT)
- RECESSED LIGHTING FIXTURE (EMERGENCY LIFE SAFETY CIRCUIT)
- RECESSED LIGHTING FIXTURE (EMERGENCY CRITICAL CIRCUIT)
- WALL MOUNTED (BRACKET OR FLUSH) LIGHTING FIXTURE (NORMAL CIRCUIT)
- Z ZONE DOME LIGHT, CEILING OR WALL MOUNTED
- CB CODE BLUE ZONE DOME LIGHT WITH 2 LAMPS, CEILING OR WALL MOUNTED
- P PSYCHIATRIC PATIENT STATION
- PA PSYCHIATRIC SPEAKER/MICROPHONE, CEILING MOUNTED
- PT PSYCHIATRIC TOILET/DRESSING STATION
- PS PSYCHIATRIC BATH/SHOWER STATION
- NS NURSE CALL MASTER STATION, WALL OR DESK MOUNTED
- CBA NURSE CALL CODE BLUE ANNUNCIATOR, WALL OR DESK MOUNTED
- EC NURSE CALL EQUIPMENT CABINET "EC" INDICATES INDIVIDUAL CABINET DESIGN
- A NURSE CALL ANNUNCIATOR STATION
- AA NURSE CALL AUXILARY ANNUNCIATOR STATION
- RC NURSE CALL RELAY CABINET

TUMBLER SWITCHES

- S 20 AMPERE 120/277 VOLT, SINGLE POLE SWITCH – LETTER INDICATES SWITCHING ARRANGEMENT
- S2a 20 AMPERE 120/277 VOLT, TWO POLE SWITCH – LETTER INDICATES SWITCHING ARRANGEMENT
- S3a 20 AMPERE 120/277 VOLT, THREE POLE SWITCH – LETTER INDICATES SWITCHING ARRANGEMENT
- S4a 20 AMPERE 120/277 VOLT, FOUR POLE SWITCH – LETTER INDICATES SWITCHING ARRANGEMENT
- SK 20 AMPERE 120/277 VOLT, SINGLE POLE KEY SWITCH
- S2K 20 AMPERE 120/277 VOLT, TWO POLE KEY SWITCH
- S3K 20 AMPERE 120/277 VOLT, THREE POLE KEY SWITCH
- S4K 20 AMPERE 120/277 VOLT, FOUR POLE KEY SWITCH
- ST SINGLE POLE SWITCH WITH THERMAL ELEMENT
- SP SINGLE POLE SWITCH WITH PILOT LIGHT
- SD DIMMER SWITCH
- MDS MOTION DETECTOR OR SENSOR

NURSE CALL SYSTEM

- HB SINGLE BED STATION WITH WALL SPEAKER AND PATIENT CONTROL UNIT
- HBC SINGLE BED STATION WITH WALL SPEAKER AND SINGLE ACTION PUSH BUTTON CORD SET
- PB PUSH BUTTON TYPE PATIENT STATION
- DB DUAL BEDSIDE STATION WITH WALL SPEAKER AND TWO PATIENT CONTROL UNITS
- T TOILET/DRESSING ROOM STATION
- S SHOWER STATION, CEILING MOUNTED WITH PULL CORD
- CB CODE BLUE STATION
- DOME LIGHT WITH SINGLE LAMP, CEILING MOUNTED
- DOME LIGHT WITH SINGLE LAMP, WALL MOUNTED
- DS DUTY STATION
- SS STAFF STATION
- SE STAFF EMERGENCY STATION

COMMUNICATIONS

- W TELEPHONE OUTLET DEVICE (WALL MOUNTED) – PROVIDE 3/4" C. TO ABOVE HUNG CEILING
- P TELEPHONE OUTLET DEVICE (PUBLIC) – PROVIDE 3/4" C. TO ABOVE HUNG CEILING
- TELEPHONE OUTLET DEVICE – PROVIDE 3/4" C. TO ABOVE HUNG CEILING
- COMPUTER/TELEPHONE OUTLET DEVICE – PROVIDE 3/4" C. TO ABOVE HUNG CEILING
- TELEPHONE FLOOR BOX
- TELEPHONE/DATA FLOOR BOX
- TV CABLE TELEVISION OUTLET DEVICE – PROVIDE 3/4" C. TO ABOVE HUNG CEILING
- INTERCOM OUTLET DEVICE
- M MONITOR OUTLET DEVICE – PROVIDE 3/4" C. TO ABOVE HUNG CEILING

FIRE ALARM SYSTEM

- F MANUAL PULL STATION
- FIRE ALARM SIGNALS (AUDIBLE AND VISUAL)
- FIRE ALARM SIGNAL (VISUAL ONLY)
- FIRE ALARM SIGNALS (AUDIBLE AND VISUAL) – 30 CANDELA
- FIRE ALARM SIGNALS (AUDIBLE AND VISUAL) – 60 CANDELA
- FIRE ALARM SIGNALS (AUDIBLE AND VISUAL) – 95 CANDELA
- FIRE ALARM SIGNALS (AUDIBLE AND VISUAL) – CHIME
- FIRE ALARM SIGNALS (AUDIBLE AND VISUAL) – GONG
- FIRE ALARM SIGNALS (AUDIBLE AND VISUAL) (CEILING MTD)
- H HEAT DETECTOR – RATE OF RISE
- H HEAT DETECTOR – FIXED TEMPERATURE
- S SMOKE DETECTOR
- D DUCT SMOKE DETECTOR IN SUPPLY AND/OR RETURN AIR DUCTS
- DD HVAC DUCT DAMPER
- F FLAME DETECTOR
- BT BEAM DETECTOR TRANSMITTER
- BR BEAM DETECTOR RECEIVER
- B FIRE ALARM MINI HORN/STROBE UNIT
- RTS SMOKE DETECTOR REMOTE TEST STATION
- EH ELECTRO-MAGNETIC DOOR HOLDER CONNECTION
- FS FLOW SWITCH – FURNISHED BY DIVISION 15, WIRED BY DIVISION 16
- TS TAMPER SWITCH – FURNISHED BY DIVISION 15, WIRED BY DIVISION 16
- PS PRESSURE SWITCH – FURNISHED BY DIVISION 15, WIRED BY DIVISION 16
- FACP FIRE ALARM CONTROL PANEL
- FAA FIRE ALARM ANNUNCIATOR
- FIRE ALARM MASTER BOX
- FIRE FIGHTERS TELEPHONE
- REMOTE INDICATING LIGHT

PUBLIC ADDRESS

- S FLUSH CEILING SPEAKER
- S WALL MOUNTED SPEAKER BI-DIRECTIONAL
- V VOLUME CONTROL
- M MICROPHONE OUTLET DEVICE
- A AMPLIFIER

PHYSIOLOGICAL MONITORING

- PM PS PHYSIOLOGICAL MONITORING SYSTEM PATIENT STATION
- PM MS PHYSIOLOGICAL MONITORING SYSTEM MASTER STATION
- PM CPU PHYSIOLOGICAL MONITORING SYSTEM CENTRAL PROCESSING UNIT

MASTER CLOCK

- CO CLOCK OUTLET (WALL MOUNTED)
- CO CLOCK OUTLET (CEILING MOUNTED)
- CO/E ELAPSED TIMER
- T ELAPSED TIMER CONTROLLER

SECURITY SYSTEM

- PB EMERGENCY PUSHBUTTON; 4" SQUARE BOX WITH SINGLE-GANG PLASTER RING
- DR DOOR RELEASE PUSHBUTTON
- CCTV CLOSE CIRCUIT TELEVISION CAMERA JUNCTION BOX MOUNTED ABOVE SUSPENDED CEILING
- CR CARD READER
- EL ELECTRO-MAGNETIC DOOR LOCK
- DS DOOR SWITCH
- CCTV CLOSED CIRCUIT TELEVISION MONITOR

ONE LINE DIAGRAM SYMBOLS

- MEDIUM VOLTAGE INTERRUPTOR SWITCH
- FUSE
- MEDIUM VOLTAGE CABLE TERMINATION
- TRANSFORMER
- MEDIUM VOLTAGE SURGE ARRESTER
- MEDIUM VOLTAGE DRAW OUT VACUUM CIRCUIT BREAKER
- LOW VOLTAGE DRAW OUT POWER CIRCUIT BREAKER
- LOW VOLTAGE CIRCUIT BREAKER
- TVSS TRANSIENT VOLTAGE SURGE SUPPRESSER
- POTENTIAL TRANSFORMER
- CURRENT TRANSFORMER
- DMM DIGITAL MULTIFUNCTIONAL METER
- GFI GROUND FAULT INTERRUPTER

MARK	ISSUE DATE	DESCRIPTION
BID	08/31/04	BID SET

Issue Log

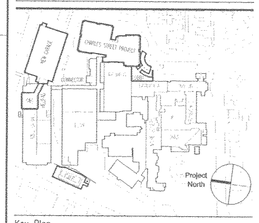

Key Plan

TRO
Architecture
Planning
Engineering
Interior Design
The Ritchie Organization
80 Bridge Street
Newton, MA 02458-1134
617-969-9400

Maine Medical Center
Pkg C - Site Utitlities
Portland, Maine MMC Project No. 21846

Drawing Title
ELECTRICAL LEGEND, GENERAL NOTES AND ABBREVIATIONS

0' 0 0 0 0

Commission No.	4677	Date Issued	08/31/04
Scale	NONE	Sheet Number	PKG-C
Drawn By	G.S.		
Approved By	T.S.		E001
Filename	4677E001		

Copyright © 2004 The Ritchie Organization

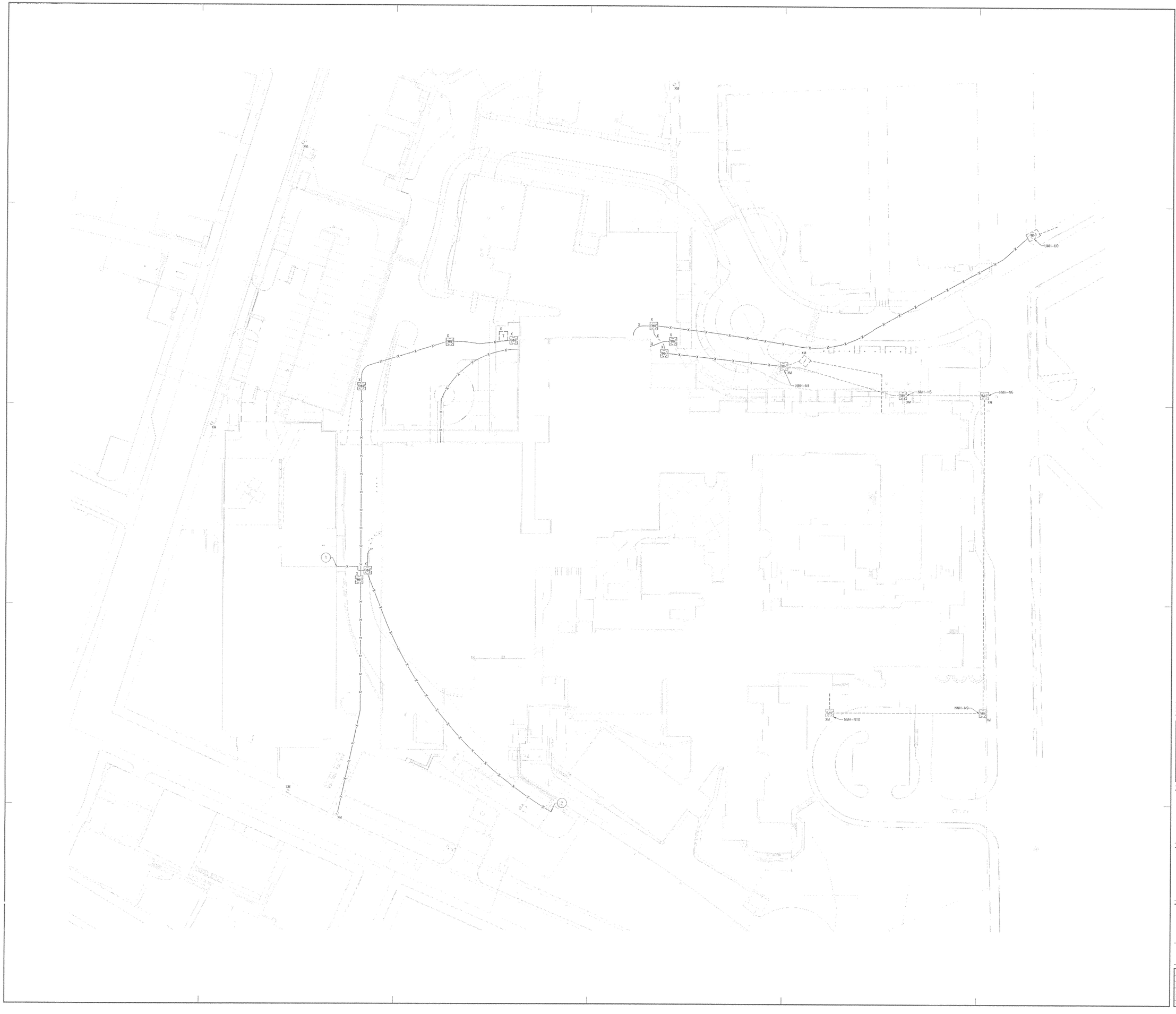

General Notes:

LEGEND:

EXISTING MANHOLE

EXISTING CONDUIT/DUCTBANK LOCATED UNDERGROUND

EXISTING CONDUIT TO BE DEMOLISHED

GENERAL NOTES:

1. ALL EXISTING AND NEW CONDUITS INDICATED ON THIS PLAN ARE ROUTED IN CONCRETE ENCASEMENTS UNLESS NOTED OTHERWISE.
2. ALL EXISTING CONDUITS INDICATED ON THIS PLAN ARE TO REMAIN UNLESS NOTED OTHERWISE.
3. COORDINATE DEMOLITION WITH PACKAGE F CONTRACTOR.
4. SEE CIVIL PLANS FOR OTHER ELECTRICAL DEMOLITION.

DEMOLITION NOTES:

D1. GENERALLY, IN AREAS SCHEDULED FOR DEMOLITION AND REMODELING, WHEN ELECTRICAL DEVICES ARE REMOVED, REMOVE EXPOSED PORTIONS OF THE BRANCH CIRCUIT WIRING AND BE RESPONSIBLE FOR MAINTAINING THE INTEGRITY OF EXISTING CIRCUITS FEEDING DEVICES THAT ARE TO REMAIN.

D2. UTILIZE, WHEREVER POSSIBLE, PRACTICAL, AND APPROVED BY THE ARCHITECT, EXISTING LIGHT POLES, CONDUIT, FEEDERS, ETC. COMPATIBLE WITH THE MATERIAL SPECIFIED FOR INSTALLATION IN THE NEW CONSTRUCTION AREAS. WHEREVER EXISTING RACEWAY SYSTEMS ARE UTILIZED, REMOVE EXISTING WIRING. IN SUCH CASES, ASSOCIATED CONDUITS AND WIRING SHALL BE ARRANGED TO ACCOMMODATE THE WIRING SHOWN ON THE DRAWING.

D3. ELECTRICAL EQUIPMENT REMOVED SHALL BE STOCKPILED FOR FUTURE REUSE. IN THE EVENT THE EXISTING DEVICES ARE NOT REUSED, THEY SHALL BE RETURNED TO THE OWNER OR DISCARDED PER OWNER DIRECTIVE.

D4. ELECTRICAL CONTRACTOR SHALL MAINTAIN THE INTEGRITY OF EXISTING SYSTEMS AND CIRCUITS, SCHEDULED TO REMAIN, DURING DEMOLITION.

DRAWING NOTES:

1. MAINTAIN POWER TO GARAGE DURING CONSTRUCTION.
2. MAINTAIN TELEPHONE SERVICE AND SECURITY CAMERA TO PUMPHOUSE DURING CONSTRUCTION.

MARK	ISSUE DATE	DESCRIPTION
BID	08/31/04	BID SET

Issue Log

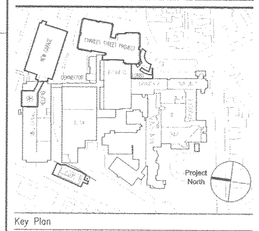

Key Plan

TRO
Architecture
Planning
Engineering
Interior Design
The Ritchie Organization
80 Bridge Street
Newton, MA 02458-1134
617-969-9400

Maine Medical Center
Pkg C - Site Utitlities
Portland, Maine MMC Project No. 21846

Drawing Title
ELECTRICAL SITE DEMOLITION PLAN

0' 15' 30' 60' 120'

Commission No.	4672	Date Issued	08/31/04
Scale	1"=30'-0"	Sheet Number	PKG-C
Drawn By	G.S.		E010
Approved By	T.S.		
Filename	4672E010		

Copyright © 2004 The Ritchie Organization

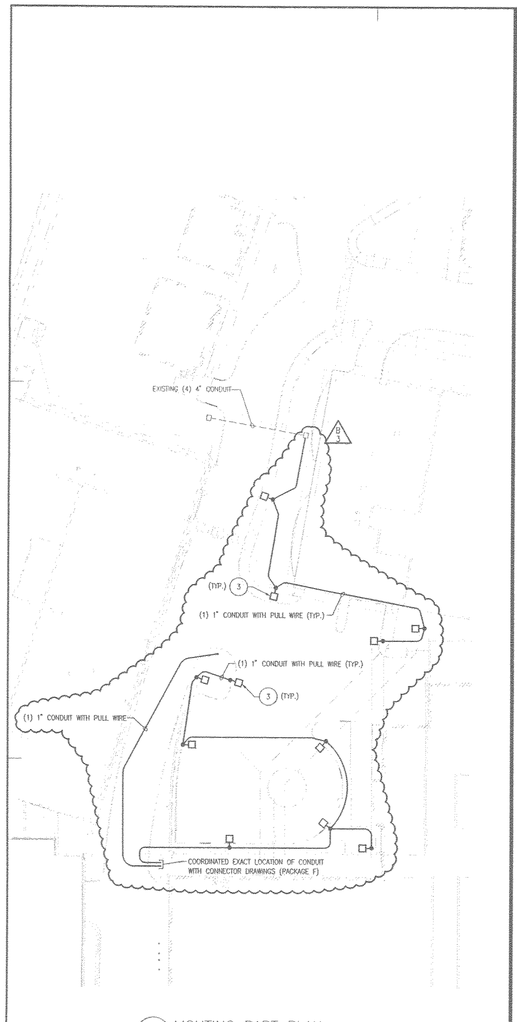

2 LIGHTING PART PLAN
1" = 20'

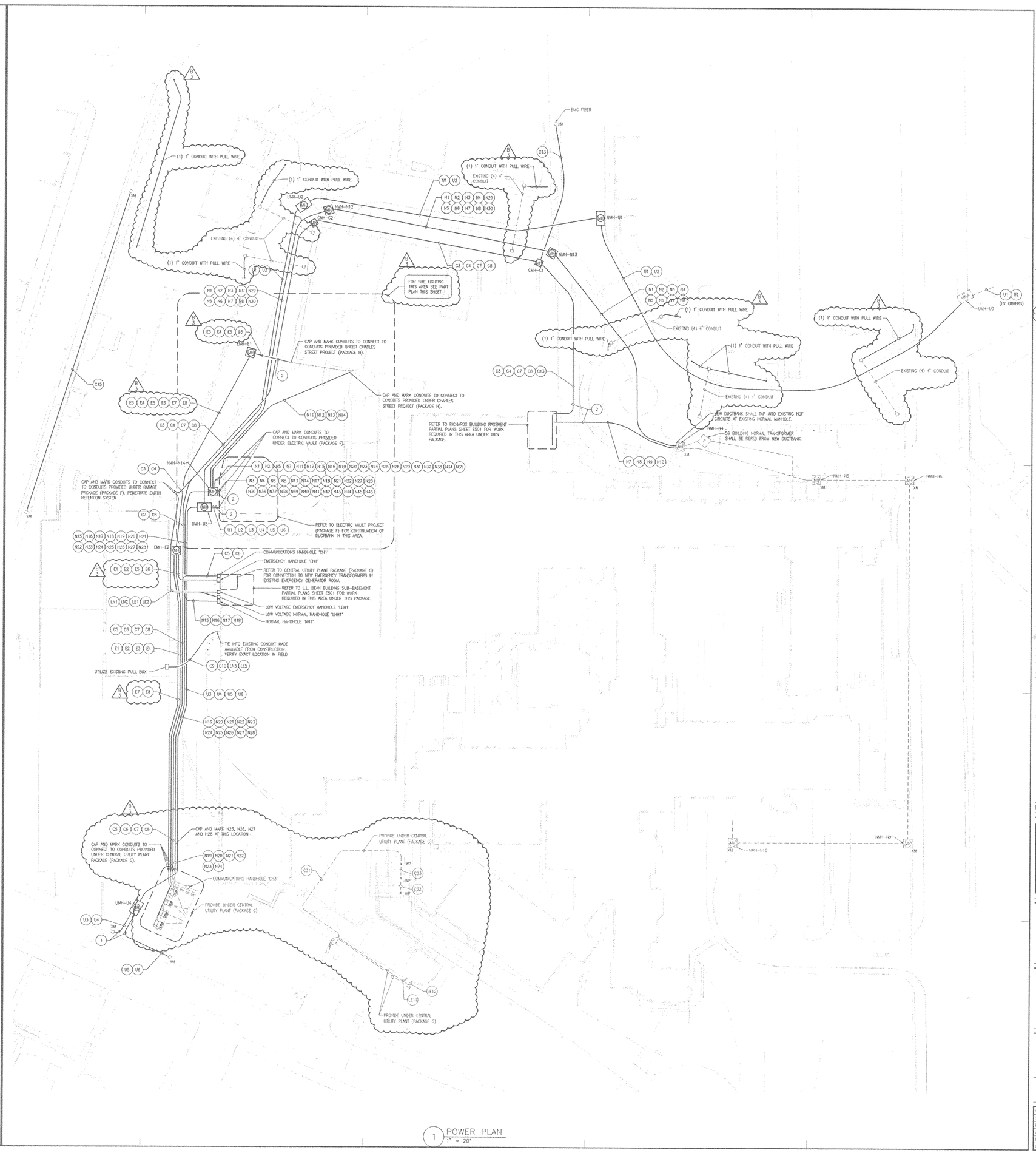

1 POWER PLAN
1" = 20'

General Notes:

LEGEND:

- HANDHOLE (SEE DETAIL ON SHEET E800)
- MANHOLE (SEE DETAILS ON SHEET E800)
- NEW
- EXISTING TO REMAIN
- REFER TO ALTERNATE PACKAGE
- T.O.D. TOP OF DUCTBANK
- SITE LIGHTING BASE PROVIDED BY CIVIL ENGINEERS

GENERAL NOTES:

1. ALL ELECTRICAL CONDUITS, DUCTBANKS, MANHOLES, AND HANDHOLES INDICATED ON THIS PLAN ARE PART OF THIS PACKAGE UNLESS SPECIFICALLY INDICATED OTHERWISE.
2. ALL CONDUITS INDICATED ON THIS PLAN SHALL BE 5" SIZE AND ENCASED IN CONCRETE UNLESS NOTED OTHERWISE.
3. DUCTBANK SECTIONS ARE FOR DIAGRAMMATIC PURPOSES ONLY. REFER TO CIVIL PLANS FOR CROSS SECTIONS.
4. TOP OF ELECTRICAL DUCTBANKS SHALL BE LOCATED A MINIMUM OF 24" BELOW FINISHED GRADE.
5. SEE SPECIFICATIONS FOR MINIMUM CLEARANCES FROM OTHER UTILITIES.
6. UNLESS NOTED OTHERWISE, SLOPE CONDUITS AWAY FROM BUILDING ENTRANCE TO MANHOLE OR HANDHOLE.
7. DUCTBANKS SHOWN ON THIS PLAN ARE FOR DIAGRAMMATIC PURPOSES ONLY. REFER TO CIVIL ENGINEERING PLANS FOR DUCTBANK LOCATIONS AND ELEVATIONS.
8. MEET CMP REQUIREMENTS FOR CONDUIT INSTALLATION.

DRAWING NOTES:

1. UTILITY CONDUITS WILL BE CONSTRUCTED TO POLE ENCASED IN CONCRETE. AT POLE TWO CONDUITS WILL BE CONSTRUCTED UP POLE AND TWO CONDUITS SHALL BE CAPPED FOR FUTURE USE.
2. PROVIDE A LOW POINT IN DUCT BANK RUN TO AVOID SLOPING INTO BUILDING.
3. COORDINATE EXACT LOCATION OF LIGHT BASE WITH CIVIL DRAWINGS.

RECEIVED
OCT 27
Office of Facilities & Capital Construction

MARK	ISSUE DATE	DESCRIPTION
BUL-03	10/21/04	BULLETIN NUMBER 03 - PKG C
A1	09/27/04	ADDENDUM NO.1
PERMIT	09/16/04	PERMIT SET
BID	08/31/04	BID SET

Issue Log

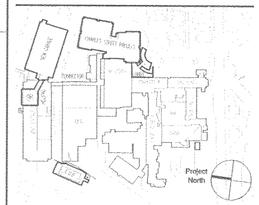

Key Plan

TRO
Architecture
Planning
Engineering
Interior Design
The Ritchie Organization
80 Bridge Street
Newton, MA 02458-1134
617-969-8400

Maine Medical Center
Pkg C - Site Utitlities
Portland, Maine MMC Project No. 21846

Drawing Title
ELECTRICAL SITE DISTRIBUTION PLAN

0' 15' 30' 60' 120'

Commission No.	4677	Date Issued	08/31/04
Scale	1"=30'-0"	Sheet Number	PKG-C
Drawn By	G.S.		E040
Approved By	T.S.		
Filename	4677E040		

Copyright © 2004 The Ritchie Organization

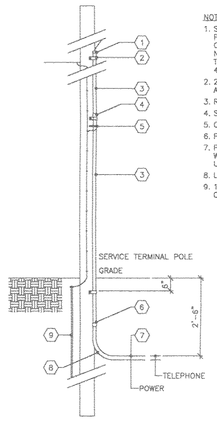

NOTES:

1. SEAL TOP OF CONDUIT WITH POLYURETHANE SEALER. TOP OF CONDUIT SHALL HAVE A DOUBLE NON-THREADED PLASTIC COUPLING. TOP OF CONDUIT SHALL EXTEND 4" ABOVE PRIMARY NEUTRAL.
2. 2 HOLE U CUPS AT TOP, BOTTOM, AND UNDER EACH COUPLING.
3. RGID STEEL GALVANIZED CONDUIT.
4. STEEL CONDUIT COUPLING.
5. CONDUIT GROUNDED CONNECTOR.
6. PVC TO STEEL CONDUIT COUPLING.
7. PVC SCHEDULE 40 CONDUIT. COVER WITH CONCRETE WHERE PASSING UNDER ROADWAYS OR DRIVES.
8. LONG SWEEP CONDUIT ELBOW.
9. 1/2" DIA. X 8 FT. LONG COPPER CLAD GROUND ROD.

RISER POLE DETAIL

NOT TO SCALE

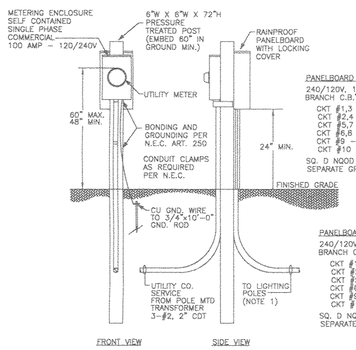

PANELBOARD P1:
240/120V, 1PH, 3W, 100A, MLO
BRANCH C.B.'S:
CKT #1,3 – 20A/2P STREET LTG
CKT #2,4 – 20A/2P STREET LTG
CKT #5,7 – 20A/2P SPARE
CKT #6,8 – 20A/2P SPARE
CKT #9 – 20A/1P SPARE
CKT #10 – 20A/1P SPARE
SQ. D NQOD SERIES OR EQUAL WITH SEPARATE GROUND BAR

PANELBOARD P2:
240/120V, 1PH, 3W, 100A, MLO
BRANCH C.B.'S:
CKT #1,3 – 20A/2P STREET LTG
CKT #2,4 – 20A/2P STREET LTG
CKT #5,7 – 20A/2P SPARE
CKT #6,8 – 20A/2P SPARE
CKT #9 – 20A/1P SPARE
CKT #10 – 20A/1P SPARE
SQ. D NQOD SERIES OR EQUAL WITH SEPARATE GROUND BAR

EXTERIOR MOUNTED PANEL AND METER DETAIL

NOT TO SCALE
TYPICAL FOR PANELS P1 AND P2

SITE LIGHTING

POLES SL-6, SL-8
MANUFACTURER: KIM
MODEL: #1A/CC21A3/100MH240/BL-P/1A/VSF-1A/HS (LUMINAIRE)
MODEL: #PRA14-4125/A/BL-P (POLE)
LAMP: 100 WATT METAL HALIDE

POLES SL-15, SL-16, SL-17, SL-18
MANUFACTURER: KIM
MODEL: #1A/CC17A2/100MH240/BLP/1A/VSF-1A/HS (LUMINAIRE)
MODEL: #PRA14-4125/A/BL-P (POLE)
LAMP: 100 WATT METAL HALIDE

POLES SL-7, SL-9, SL-10, SL-11, SL-12, SL-13
MANUFACTURER: KIM
MODEL: #1A/CC17A4/100MH240/BL-P/1A/VSF-1A (LUMINAIRE)
MODEL: #PRA14-4125/A/BL-P (POLE)
LAMP: 100 WATT METAL HALIDE

POLE SL-14
MANUFACTURER: ARCHITECTURAL AREA LIGHTING
MODEL: #SL-VTH5-70MH240/PR4-4R16-125/BLK/PHOTOCELL (LUMINAIRE & POLE)
LAMP: 70 WATT METAL HALIDE

POLES SL-20 THRU SL-30
MANUFACTURER: HOLOPHANE
MODEL: #(2)ESP070MH12AS (RAL-6012) (LUMINAIRE)
MODEL: #PM(25.0)RT(8.7E)18CSB-CAS/HDGS/CS-BC(1.0X12) -2KBWPROV-PD6S/2-CA/CS-PDCAP-CA/CA (POLE)
LAMP: (2) 70 WATT METAL HALIDE

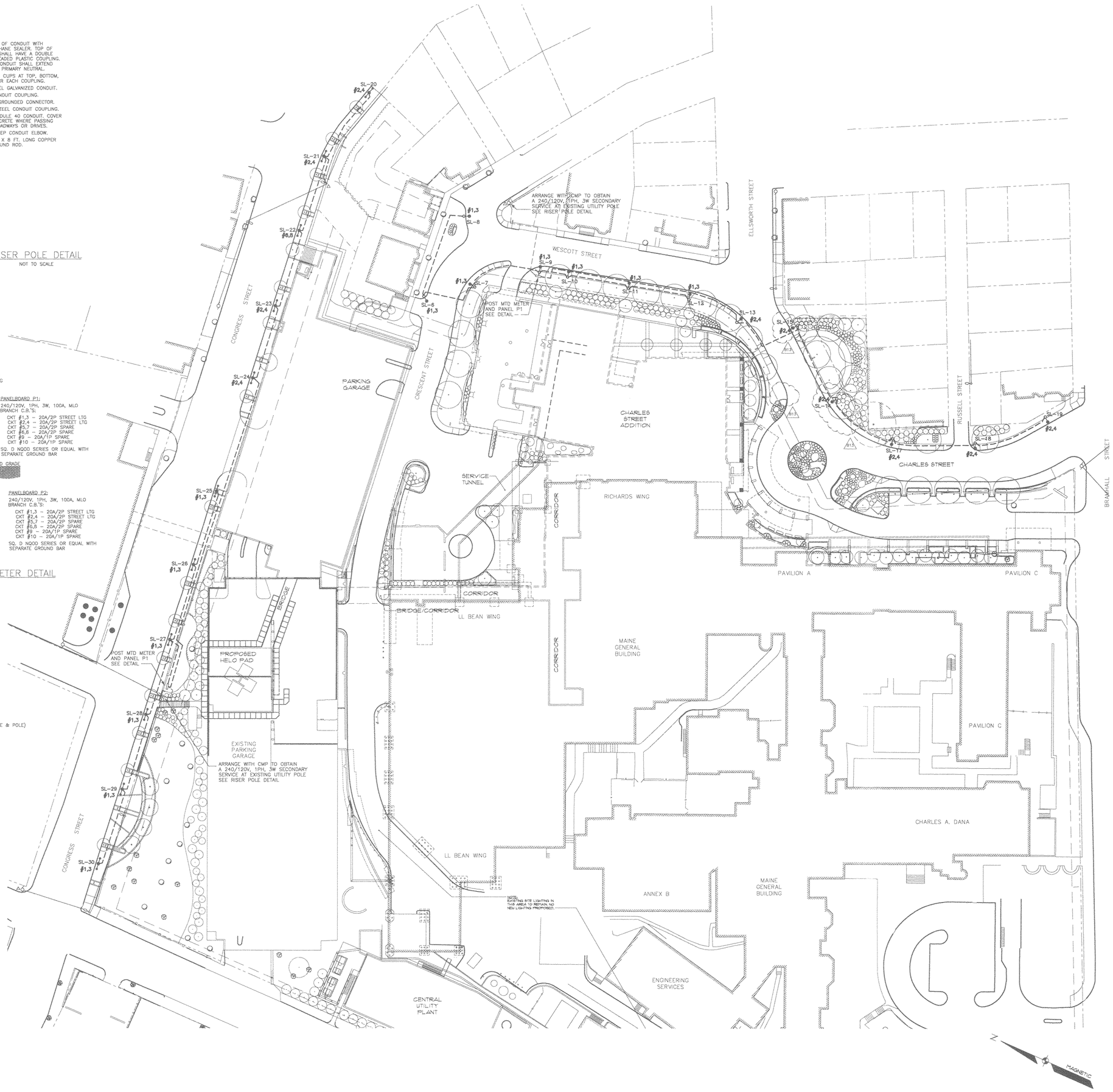

General Notes:

1. UNDERGROUND STREET LIGHTING WIRING SHALL BE #2 AWG CONDUCTORS IN 1-1/2" PVC SCHED. 40 CONDUIT.
2. BURY ALL STREET LIGHTING CONDUITS 30" BELOW FINISHED GRADE (MINIMUM).
3. PROVIDE A 3" CONCRETE ENVELOPED AROUND ALL STREET LIGHTING CONDUITS THAT ARE LOCATED BENEATH STREETS AND/OR VEHICLE DRIVES (CONCRETE ENVELOPE NOT REQUIRED BELOW SIDEWALKS).
4. ALL WORK SHALL CONFORM NFPA 70.
5. SEE CIVIL SITE DRAWINGS FOR LIGHTING POLE CONCRETE FOUNDATION BASES.

MARK	ISSUE DATE	DESCRIPTION
	09/18/07	BULLETIN 13
	12/02/05	ISSUED FOR U/G ELECTRICAL
	09/28/05	ISSUED FOR R.O.W. LAYOUT

Issue Log

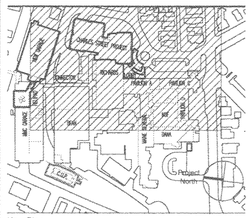

Key Plan

TRO
ARCHITECTURE
PLANNING
ENGINEERING
INTERIOR DESIGN
The Ritchie Organization
80 Bridge Street
Newton, MA 02458-1134
617-969-9400

STATE OF MAINE
LAWRENCE E. BARTLETT #7928
REGISTERED PROFESSIONAL ENGINEER

Lawrence E. Bartlett

Rec'd 9/20/07

Maine Medical Center

Pkg C - Site Utilities

Portland, Maine

MMC Project No. 21846

Drawing Title

ELECTRICAL PLAN

0 15 30 60 120

Commission No.	4677	Date Issued	11/22/05
Scale	1"=30'	Sheet Number	PKG-C
Drawn By	JJC		E100
Approved By	LEB		
Filename			

Copyright © 2004 The Ritchie Organization

3 L.L. BEAN BUILDING SUB-BASEMENT
TRANSFORMER VAULT POWER PLAN
SCALE: 1/4"=1'-0"

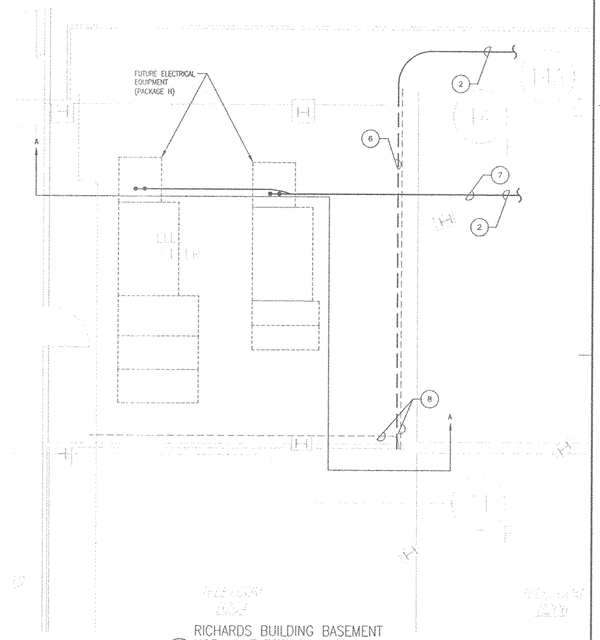

1 RICHARDS BUILDING BASEMENT
NORMAL ELECTRICAL ROOM
SCALE: 1/4"=1'-0"

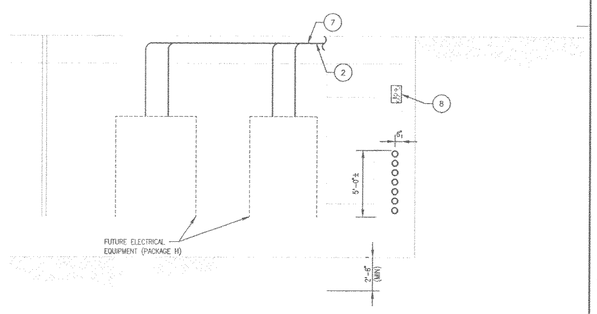

2 RICHARDS BUILDING BASEMENT
NORMAL ELECTRIC ROOM – SECTION A–A
SCALE: 1/4"=1'-0"

General Notes:

- - - - EXISTING TO REMAIN
——— EXTERIOR CONCRETE ENCASED CONDUIT
- - - - FUTURE
— — OVERHEAD/EXPOSED CONDUIT

DRAWING NOTES:

1. FUTURE EQUIPMENT – COORDINATE EXACT LOCATION WITH EQUIPMENT INSTALLED UNDER ALTERNATE PACKAGE.
2. REFER TO SITE PLAN FOR CONTINUATION OF UNDERGROUND DUCTBANK.
3. (2) 4" CONDUITS (1 ACTIVE/1 SPARE) FROM NORMAL HANDHOLE UP EXTERIOR TRANSFORMER VAULT WALL, PENETRATING INTO TRANSFORMER VAULT, AND ACROSS VAULT CEILING TO EXISTING 15KV LOAD BREAK SWITCHGEAR.
4. (2) 4" CONDUITS (1 ACTIVE/1 SPARE) FROM NORMAL HANDHOLE UP EXTERIOR TRANSFORMER VAULT WALL, PENETRATING INTO TRANSFORMER VAULT, AND ACROSS VAULT CEILING TO ELECTRIC SWITCHGEAR ROOM TO EXISTING MAIN DISTRIBUTION SWITCHBOARD.
5. (2) 4" CONDUITS (1 ACTIVE/1 SPARE) FROM EMERGENCY HANDHOLE UP EXTERIOR EMERGENCY GENERATOR ROOM WALL, PENETRATING INTO EMERGENCY GENERATOR ROOM, AND ACROSS CEILING TO EXISTING SQUARE D EMERGENCY DISTRIBUTION PANEL.
6. (5) 5" CONDUITS FROM COMMUNICATIONS MANHOLE CMH-C1 AND (2) 5" VERIZON CONDUITS (REFER TO CIVIL PLANS), PENETRATING INTO NORMAL ELECTRIC ROOM AND PENETRATING INTO TEL/COM ROOM B204.
7. (4) 5" CONDUITS (2 ACTIVE/2 SPARE) FROM EXISTING MANHOLE NMH-M4 TO RICHARDS BUILDING SWITCHGEAR (PACKAGE H).
8. EXISTING TO REMAIN: (1) FIBER, (4) MULTI COPPER AND (3) STATION CABLES APPROXIMATELY 9' AFF. COORDINATE REMOVAL OF UNUSED CABLE WITH OWNER.

MARK	ISSUE DATE	DESCRIPTION
BID	08/31/04	BID SET

Issue Log

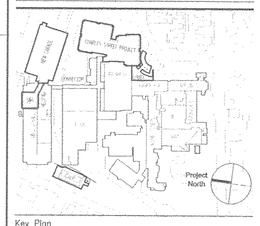

Key Plan

TRO
Architecture
Planning
Engineering
Interior Design
The Ritchie Organization
80 Bridge Street
Newton, MA 02458-1134
617-969-9400

Maine Medical Center
Pkg C - Site Utitlities
Portland, Maine MMC Project No. 21846

Drawing Title
ELECTRICAL PARTIAL POWER PLANS

0' 0 0 0 0

Commission No.	4677	Date Issued	08/31/04
Scale	AS NOTED	Sheet Number	PKG-C
Drawn By	G.S.		
Approved By	T.S.		E501
Filename	4677E501		

Copyright © 2004 The Ritchie Organization

SITE DISTRIBUTION CONDUIT SCHEDULE

CONDUIT NO.	ORIGIN	DESTINATION	VIA	SIZE	CONDUIT USE	REMARKS
UTILITY CONDUITS						
U1	UMH-U0	2' OUTSIDE PRIMARY ELECTRICAL VAULT	VIA UMH-U1, UMH-U2 AND UMH-U5	5"	UTILITY FEEDER	FOREST AVE.
U2	UMH-U0	2' OUTSIDE PRIMARY ELECTRICAL VAULT	VIA UMH-U1, UMH-U2 AND UMH-U5	5"	SPARE	FOREST AVE.
U3	CMP POLE NO. 5	2' OUTSIDE PRIMARY ELECTRICAL VAULT	VIA UMH-U4 AND UMH-U5	5"	UTILITY FEEDER	SEWALL ST.
U4	CMP POLE NO. 5	2' OUTSIDE PRIMARY ELECTRICAL VAULT	VIA UMH-U4 AND UMH-U5	5"	SPARE	SEWALL ST.
U5	CMP POLE	2' OUTSIDE PRIMARY ELECTRICAL VAULT	VIA UMH-U4 AND UMH-U5	5"	UTILITY FEEDER	FORE RIVER
U6	CMP POLE	2' OUTSIDE PRIMARY ELECTRICAL VAULT	VIA UMH-U4 AND UMH-U5	5"	SPARE	FORE RIVER
U7						
U8						
U9						
U10						
U11						
U12						
U13						
U14						
U15						
U16						
U17						
U18						
U19						
U20						
U21						
U22						
U23						
U24						
U25						
U26						
U27						
U28						
U29						
U30						
NORMAL POWER CONDUITS						
N1	2' OUTSIDE PRIMARY ELECTRICAL VAULT	NMH-N4	VIA NMH-N14, NMH-N12, AND NMH-N13	5"	NORMAL FEEDER	NDF
N2	2' OUTSIDE PRIMARY ELECTRICAL VAULT	NMH-N4	VIA NMH-N14, NMH-N12, AND NMH-N13	5"	SPARE	
N3	2' OUTSIDE PRIMARY ELECTRICAL VAULT	NMH-N4	VIA NMH-N14, NMH-N12, AND NMH-N13	5"	NORMAL FEEDER	NDF
N4	2' OUTSIDE PRIMARY ELECTRICAL VAULT	NMH-N4	VIA NMH-N14, NMH-N12, AND NMH-N13	5"	SPARE	
N5	2' OUTSIDE PRIMARY ELECTRICAL VAULT	56 BUILDING TRANSFORMER	VIA NMH-N14, NMH-N12, NMH-N13 AND NMH-N4	5"	NORMAL FEEDER	
N6	2' OUTSIDE PRIMARY ELECTRICAL VAULT	56 BUILDING TRANSFORMER	VIA NMH-N14, NMH-N12, NMH-N13 AND NMH-N4	5"	NORMAL FEEDER	
N7	2' OUTSIDE PRIMARY ELECTRICAL VAULT	RICHARDS BUILDING SWITCH 1	VIA NMH-N14, NMH-N12, NMH-N13 AND NMH-N4	5"	NORMAL FEEDER	
N8	2' OUTSIDE PRIMARY ELECTRICAL VAULT	RICHARDS BUILDING SWITCH 2	VIA NMH-N14, NMH-N12, NMH-N13 AND NMH-N4	5"	NORMAL FEEDER	
N9	NMH-N4	RICHARDS BUILDING SWITCH 1		5"	SPARE	
N10	NMH-N4	RICHARDS BUILDING SWITCH 2		5"	SPARE	
N11	2' OUTSIDE PRIMARY ELECTRICAL VAULT	4' OUTSIDE CHARLES ST. BUILDING	VIA NMH-N14	5"	NORMAL FEEDER	CHARLES ST. SWITCH 1
N12	2' OUTSIDE PRIMARY ELECTRICAL VAULT	4' OUTSIDE CHARLES ST. BUILDING	VIA NMH-N14	5"	SPARE	CHARLES ST. SWITCH 1
N13	2' OUTSIDE PRIMARY ELECTRICAL VAULT	4' OUTSIDE CHARLES ST. BUILDING	VIA NMH-N14	5"	NORMAL FEEDER	CHARLES ST. SWITCH 2
N14	2' OUTSIDE PRIMARY ELECTRICAL VAULT	4' OUTSIDE CHARLES ST. BUILDING	VIA NMH-N14	5"	SPARE	CHARLES ST. SWITCH 2
N15	2' OUTSIDE PRIMARY ELECTRICAL VAULT	HANDHOLE "NH1"	VIA NMH-N14	5"	NORMAL FEEDER	BEAN BUILDING S&C SWITCH 1
N16	2' OUTSIDE PRIMARY ELECTRICAL VAULT	HANDHOLE "NH1"	VIA NMH-N14	5"	SPARE	BEAN BUILDING S&C SWITCH 1
N17	2' OUTSIDE PRIMARY ELECTRICAL VAULT	HANDHOLE "NH1"	VIA NMH-N14	5"	NORMAL FEEDER	BEAN BUILDING S&C SWITCH 2
N18	2' OUTSIDE PRIMARY ELECTRICAL VAULT	HANDHOLE "NH1"	VIA NMH-N14	5"	SPARE	~~BEAN BUILDING S&C SWITCH 2~~
N19	2' OUTSIDE PRIMARY ELECTRICAL VAULT	5' FROM FIRST CUP XFMR PAD	VIA NMH-N14	5"	NORMAL FEEDER	PPNSWGR1 XFMR 2A
N20	2' OUTSIDE PRIMARY ELECTRICAL VAULT	5' FROM FIRST CUP XFMR PAD	VIA NMH-N14	5"	SPARE	PPNSWGR1 XFMR 2A
N21	2' OUTSIDE PRIMARY ELECTRICAL VAULT	5' FROM FIRST CUP XFMR PAD	VIA NMH-N14	5"	NORMAL FEEDER	PPNSWGR2 XFMR 2B
N22	2' OUTSIDE PRIMARY ELECTRICAL VAULT	5' FROM FIRST CUP XFMR PAD	VIA NMH-N14	5"	SPARE	PPNSWGR2 XFMR 2B
N23	2' OUTSIDE PRIMARY ELECTRICAL VAULT	5' FROM FIRST CUP XFMR PAD	VIA NMH-N14	5"	NORMAL FEEDER	PPNSWGR3 CHILLER XFMR 1A
N24	2' OUTSIDE PRIMARY ELECTRICAL VAULT	5' FROM FIRST CUP XFMR PAD	VIA NMH-N14	5"	SPARE	PPNSWGR3 CHILLER XFMR 1A
N25	2' OUTSIDE PRIMARY ELECTRICAL VAULT	CAPPED NEAR CUP	VIA NMH-N14	5"	SPARE	~~FUTURE EXPANSION~~
N26	2' OUTSIDE PRIMARY ELECTRICAL VAULT	CAPPED NEAR CUP	VIA NMH-N14	5"	SPARE	FUTURE EXPANSION
N27	2' OUTSIDE PRIMARY ELECTRICAL VAULT	CAPPED NEAR CUP	VIA NMH-N14	5"	SPARE	FUTURE EXPANSION
N28	2' OUTSIDE PRIMARY ELECTRICAL VAULT	CAPPED NEAR CUP	VIA NMH-N14	5"	SPARE	FUTURE EXPANSION
N29	2' OUTSIDE PRIMARY ELECTRICAL VAULT	NMH-N13	VIA NMH-N14 AND NMH-N12	5"	SPARE	FUTURE EXPANSION
N30	2' OUTSIDE PRIMARY ELECTRICAL VAULT	NMH-N13	VIA NMH-N14 AND NMH-N12	5"	SPARE	FUTURE EXPANSION
N31	2' OUTSIDE PRIMARY ELECTRICAL VAULT	NMH-N14		5"	SPARE	
N32	2' OUTSIDE PRIMARY ELECTRICAL VAULT	NMH-N14		5"	SPARE	
N33	2' OUTSIDE PRIMARY ELECTRICAL VAULT	NMH-N14		5"	SPARE	
N34	2' OUTSIDE PRIMARY ELECTRICAL VAULT	NMH-N14		5"	SPARE	
N35	2' OUTSIDE PRIMARY ELECTRICAL VAULT	NMH-N14		5"	SPARE	
N36	2' OUTSIDE PRIMARY ELECTRICAL VAULT	NMH-N14		5"	SPARE	
N37	2' OUTSIDE PRIMARY ELECTRICAL VAULT	NMH-N14		5"	SPARE	
N38	2' OUTSIDE PRIMARY ELECTRICAL VAULT	NMH-N14		5"	SPARE	
N39	2' OUTSIDE PRIMARY ELECTRICAL VAULT	NMH-N14		5"	SPARE	
N40	2' OUTSIDE PRIMARY ELECTRICAL VAULT	NMH-N14		5"	SPARE	
N41	2' OUTSIDE PRIMARY ELECTRICAL VAULT	NMH-N14		5"	SPARE	
N42	2' OUTSIDE PRIMARY ELECTRICAL VAULT	NMH-N14		5"	SPARE	
N43	2' OUTSIDE PRIMARY ELECTRICAL VAULT	NMH-N14		5"	SPARE	
N44	2' OUTSIDE PRIMARY ELECTRICAL VAULT	NMH-N14		5"	SPARE	
N45	2' OUTSIDE PRIMARY ELECTRICAL VAULT	NMH-N14		5"	SPARE	
N46	2' OUTSIDE PRIMARY ELECTRICAL VAULT	NMH-N14		5"	SPARE	
N47				5"	SPARE	
N48						
N49						
N50						
N51						
N52						
N53						
N54						
N55						
N56						
N57						
N58						
N59						
N60						

SITE DISTRIBUTION CONDUIT SCHEDULE

CONDUIT NO.	ORIGIN	DESTINATION	VIA	SIZE	CONDUIT USE	REMARKS
EMERGENCY POWER CONDUITS						
E1	25' FROM CUP BUILDING	HANDHOLE "EH1"	VIA EMH-E2	5"	EMERGENCY FEEDER	FROM CUP 5KV SWGR TO BEAN BLDG 5KV SWITCH 1A
E2	25' FROM CUP BUILDING	HANDHOLE "EH1"	VIA EMH-E2	5"	SPARE	FROM CUP 5KV SWGR TO BEAN BLDG 5KV SWITCH 1A
E3	25' FROM CUP BUILDING	HANDHOLE "EH1"	VIA EMH-E2	5"	EMERGENCY FEEDER	FROM CUP 5KV SWGR TO CHARLES ST. 5KV SWITCH 1B
E4	25' FROM CUP BUILDING	HANDHOLE "EH1"	VIA EMH-E2	5"	SPARE	FROM CUP 5KV SWGR TO CHARLES ST. 5KV SWITCH 1B
E5	HANDHOLE "EH1"	4' OUTSIDE CHARLES ST. BUILDING	VIA EMH-E2 AND EMH-E1	5"	EMERGENCY FEEDER	FROM BEAN BLDG 5KV SWITCH 1B TO CHARLES ST. 5KV SWITCH 1A
E6	HANDHOLE "EH1"	4' OUTSIDE CHARLES ST. BUILDING	VIA EMH-E2 AND EMH-E1	5"	SPARE	FROM BEAN BLDG 5KV SWITCH 1B TO CHARLES ST. 5KV SWITCH 1A
E7	25' FROM CUP BUILDING	EMH-E1	VIA EMH-E2	5"	FUTURE	FROM CUP 5KV SWITCHGEAR
E8	25' FROM CUP BUILDING	EMH-E1	VIA EMH-E2	5"	FUTURE	FROM CUP 5KV SWITCHGEAR
E10						
E12						
E13						
E14						
E15						
E16						
E17						
E18						
E19						
E20						
E21						
E22						
E23						
E24						
E25						
E26						
E27						
E28						
E29						
E30						
E31						
E32						
E33						
E34						
E35						
E36						
E37						
E38						
E39						
E40						
E41						
E42						
E43						
E44						
E45						
E46						
E47						
E48						
E49						
E50						
E51						
E52						
E53						
E54						
E55						
E56						
E57						
E58						
E59						
E60						
COMMUNICATIONS CONDUITS						
C1						
C2						
C3	5' FROM CUP BUILDING	RICHARDS BUILDING TEL/COM ROOM	VIA CMH-C2 AND CMH-C1	5"	COMMUNICATIONS WIRING	TO NEW GARAGE
C4	1' OUTSIDE NEW GARAGE	RICHARDS BUILDING TEL/COM ROOM	VIA CMH-C2 AND CMH-C1	5"	COMMUNICATIONS WIRING	TO NEW GARAGE
C5	25' OUTSIDE CUP BUILDING	HANDHOLE "CH1"	VIA CH3 AND CH1	5"	COMMUNICATIONS WIRING	FROM CUP TO BEAN BUILDING
C6	25' OUTSIDE CUP BUILDING	HANDHOLE "CH1"	VIA CH3 AND CH1	5"	COMMUNICATIONS WIRING	FROM CUP TO BEAN BUILDING
C7	25' OUTSIDE CUP BUILDING	RICHARDS BUILDING TEL/COM ROOM	VIA CH3, CMH-C2 AND CMH-C1	5"	COMMUNICATIONS WIRING	FROM CUP
C8	25' OUTSIDE CUP BUILDING	RICHARDS BUILDING TEL/COM ROOM	VIA CH3, CMH-C2 AND CMH-C1	5"	COMMUNICATIONS WIRING	FROM CUP
C9	HANDHOLE "NH2"	BEAN BUILDING		5"	COMMUNICATIONS WIRING	FROM EXISTING GARAGE
C10	HANDHOLE "NH2"	BEAN BUILDING		5"	COMMUNICATIONS WIRING	FROM EXISTING GARAGE
C11						
C12						
C13	BMC POLE	TEL/COM ROOM	VIA CMH-C1	5"	COMMUNICATIONS WIRING	BMC FIBER RISER
C14	5' OUTSIDE CUP BUILDING	4' FROM EXISTING FUEL TANK #1		5"	COMMUNICATIONS WIRING	
C15	CONGRESS ST. UTILITY POLE	CONGRESS ST. UTILITY POLE		4"	COMMUNICATIONS WIRING	MMC WIRING
C16	5' OUTSIDE CUP BUILDING	3' OUTSIDE PUMPHOUSE		5"	COMMUNICATIONS WIRING	
C17						
C18						
C19						
C20						
C21						
C22						
C23						
C24						
C25						
C26						
C27						
C28						
C29						
C30						

SITE DISTRIBUTION CONDUIT SCHEDULE

CONDUIT NO.	ORIGIN	DESTINATION	VIA	SIZE	CONDUIT USE	REMARKS
LOW VOLTAGE NORMAL POWER CONDUITS						
LN1	HANDHOLE "LNH1"	1' OUTSIDE GARAGE		5"	NORMAL FEEDER	NEW GARAGE SWITCHBOARD NSB1
LN2	HANDHOLE "LNH1"	1' OUTSIDE GARAGE		5"	SPARE	NEW GARAGE SWITCHBOARD NSB1
LN3	HANDHOLE "NH2"	BEAN BUILDING		5"	NORMAL FEEDER	FROM EXISING GARAGE
LN4						
LN5						
LN6						
LN7						
LN8						
LN9						
LN10						
LOW VOLTAGE EMERGENCY POWER CONDUITS						
LE1	HANDHOLE "LEH1"	1' OUTSIDE GARAGE		5"	EMERGENCY FEEDER	NEW GARAGE SWITCHBOARD NSB1
LE2	HANDHOLE "LEH1"	1' OUTSIDE GARAGE		5"	SPARE	NEW GARAGE SWITCHBOARD NSB1
LE3	5' OUTSIDE CUP BUILDING	3' OUTSIDE PUMPHOUSE		5"	EMERGENCY FEEDER	FROM CUP TO PUMPHOUSE
LE4	5' OUTSIDE CUP BUILDING	3' OUTSIDE PUMPHOUSE		5"	SPARE	FROM CUP TO PUMPHOUSE
LE5	HANDHOLE "NH2"	BEAN BUILDING		5"	EMERGENCY FEEDER	FROM EXISTING GARAGE
LE6						
LE7						
LE8						
LE9						
LE10						

General Notes:

REDLINED
OCT 2, 2

MARK	ISSUE DATE	DESCRIPTION
BUL. 03	10/31/05	BULLETIN NUMBER 03 - PKG. C
A1	09/27/04	ADDENDUM NO.1
PERMIT	09/16/04	PERMIT SET
BID	08/31/04	BID SET

Issue Log

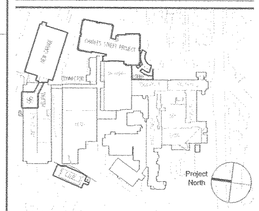

Key Plan

TRO
Architecture
Planning
Engineering
Interior Design
The Ritchie Organization
80 Bridge Street
Newton, MA 02458-1134
617-969-9400

Maine Medical Center
Pkg C - Site Utitlities
Portland, Maine
MMC Project No. 21846

Drawing Title
ELECTRICAL SCHEDULES

0" 0 0 0 0

Commission No.	4677	Date Issued	08/31/04
Scale	NONE	Sheet Number	PKG-C
Drawn By	G.S.		E700
Approved By	T.S.		
Filename	4677E700		

Copyright © 2004 The Ritchie Organization

General Notes:

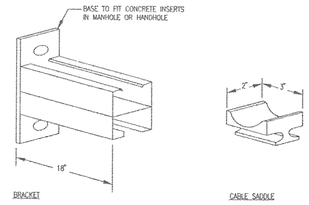

BRACKET

BRACKET CAPACITY FOR UNIFORM LOAD: 1300 LBS. WITH 2-1/2 SAFETY FACTOR. PROVIDE TWO BRACKET ASSEMBLIES FOR INSERT.

PROVIDE THREE (3) CABLE SADDLES FOR EACH BRACKET ASSEMBLY.

CABLE SADDLE

SUITABLE FOR 3" MAX. CABLE DIA. MATERIAL: FIBER GLASS REINFORCED POLYESTER.

D1 MANHOLE CABLE RACK AND SADDLE DETAIL
SCALE: N.T.S.

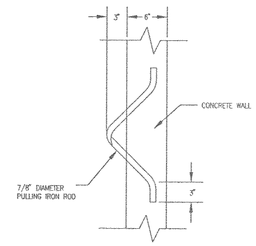

E1 B3 CABLE PULLING IRON DETAIL
SCALE: N.T.S.

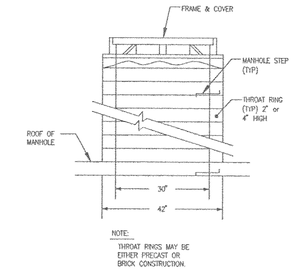

NOTE:
THROAT RINGS MAY BE EITHER PRECAST OR BRICK CONSTRUCTION.

F1 MANHOLE FRAME AND THROAT RING ASSEMBLY
SCALE: N.T.S.

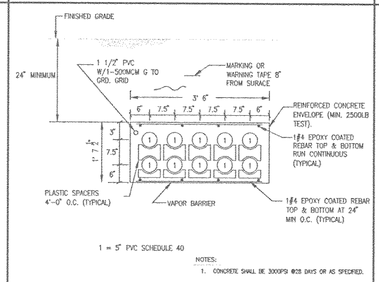

1 = 5" PVC SCHEDULE 40

NOTES:
1. CONCRETE SHALL BE 3000PSI @28 DAYS OR AS SPECIFIED.

D2 TYPICAL DUCTBANK CROSS-SECTION
SCALE: N.T.S.

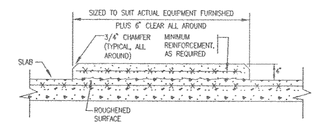

E2 TYPICAL ELECTRICAL EQUIPMENT HOUSEKEEPING PAD DETAIL
SCALE: N.T.S.

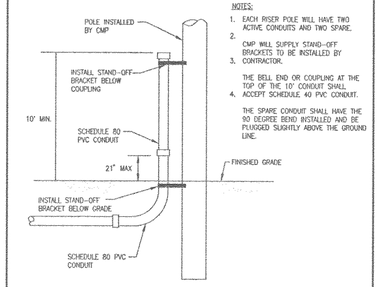

NOTES:
1. EACH RISER POLE WILL HAVE TWO ACTIVE CONDUITS AND TWO SPARE.
2. CMP WILL SUPPLY STAND-OFF BRACKETS TO BE INSTALLED BY
3. CONTRACTOR.

   THE BELL END OR COUPLING AT THE TOP OF THE 10' CONDUIT SHALL
4. ACCEPT SCHEDULE 40 PVC CONDUIT.

   THE SPARE CONDUIT SHALL HAVE THE 90 DEGREE BEND INSTALLED AND BE PLUGGED SLIGHTLY ABOVE THE GROUND LINE.

F2 RISER POLE ELEVATION (TYPICAL FOR EACH RISER CONDUIT)
SCALE: N.T.S.

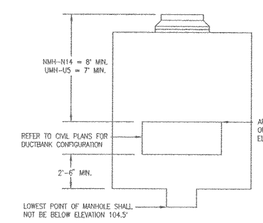

D3 MANHOLE UMH-U5 AND NMH-N14 SOUTH ELEVATION
SCALE: N.T.S.

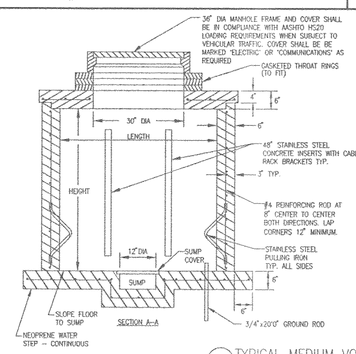

TYPE	LENGTH	WIDTH	HEIGHT
POWER	8'	8'	8'
COMMUNICATIONS	6'	6'	6'

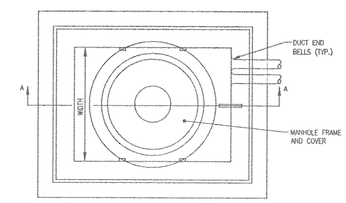

PLAN

E3 TYPICAL MEDIUM VOLTAGE MANHOLE DETAIL
SCALE: N.T.S.

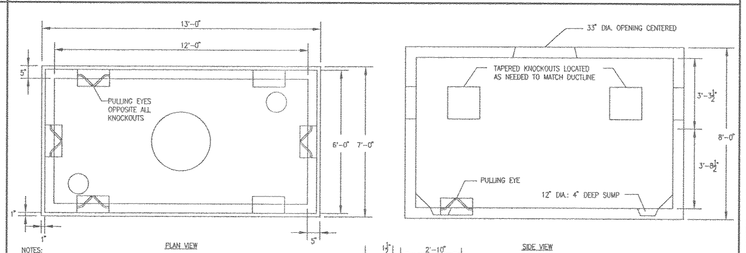

PLAN VIEW

SIDE VIEW

NOTES:
1. CONCRETE: 5000 PSI AFTER 28 DAYS
2. REINFORCED FOR H-20 LOADING
3. PULLING EYES, INSERTS, DUCT OPENINGS, CAST IN AS REQUIRED
4. SHIPLAP JOINTS SEALED WITH ASPHALTIC BUTYL RUBBER SEALANT.
5. ORDER MODEL M326 MANHOLE COVER AND FRAME FROM ETHERIDGE FOUNDRY 1035 OCEAN AVENUE, PORTLAND, ME. COVER TO BE MARKED "CMP CO."
6. INSTALL TWO COURSES OF BRICK BENEATH COVER FRAME TO ALLOW FOR FUTURE GRADE CHANGES.

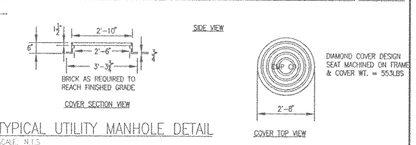

E4 TYPICAL UTILITY MANHOLE DETAIL
SCALE: N.T.S.

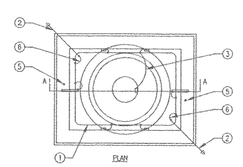

PLAN

1. GROUND GIRDLE – #4/0 AWG GND. WIRE NOT MORE THAN 6" ABOVE FLR.
2. GROUND ROD (TWO REQUIRED): 3/4" x 10'-0".
3. DOWNLEAD–#4/0 AWG GND. WIRE TO CONNECT TO MANHOLE STEPS, LADDER MOUNTING BRACKET AND WITH PIGTAILS TO CABLE RACK INSERT (TYPICAL).
4. DOWNLEAD – #4/0 AWG GROUND WIRE CONNECTING THROUGH PIGTAILS TO CABLE RACK INSERT (TYPICAL).
5. #4/0 AWG GROUND WIRE CONNECTION TO PULLING EYE.
6. #4/0 AWG GROUND WIRE BETWEEN GROUND ROD AND GROUND GIRDLE.

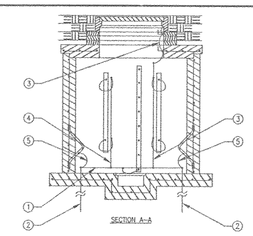

SECTION A-A

NOTES:
1. MAKE CONNECTIONS TO HARDWARE WITH FUSION WELDSOR WITH APPROVED COMPRESSION LUGS.
2. ANCHOR CONDUCTORS TO MANHOLE SURFACES NO MORE THAN 24" O.C. W/ NO SLACK. PROVIDE 1/4" STANDOFFS.
3. INSTALL CONDUCTORS SO THAT THEY DO NOT INTERFERE WITH FUNCTION OF HARDWARE.

E5 TYPICAL MANHOLE GROUNDING SYSTEM
SCALE: N.T.S.

MARK	ISSUE DATE	DESCRIPTION
BID	08/31/04	BID SET

Issue Log

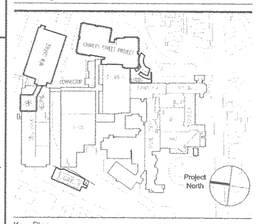

Key Plan

TRO
Architecture Planning Engineering Interior Design
The Ritchie Organization
80 Bridge Street
Newton, MA 02458-1134
617-969-9400

Maine Medical Center
Pkg C - Site Utitlities
Portland, Maine MMC Project No. 21846

Drawing title
ELECTRICAL DETAILS

0' 0 0 0 0

Commission No.	4677	Date Issued	08/31/04
Scale	NONE	Sheet Number	PKG-C
Drawn By	G.S.		E800
Approved By	T.S.		
Filename	4677E800		

Copyright © 2004 The Ritchie Organization

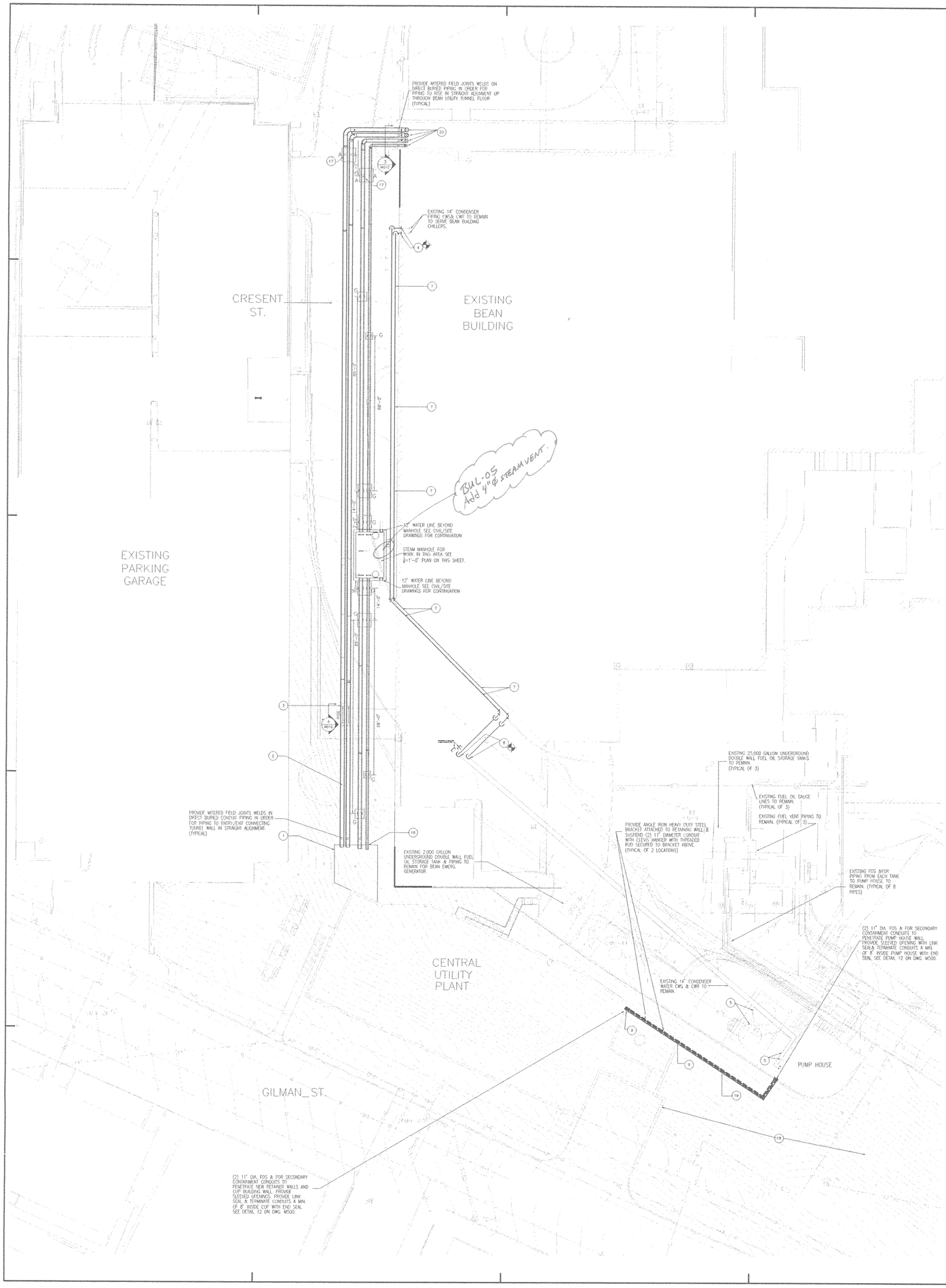

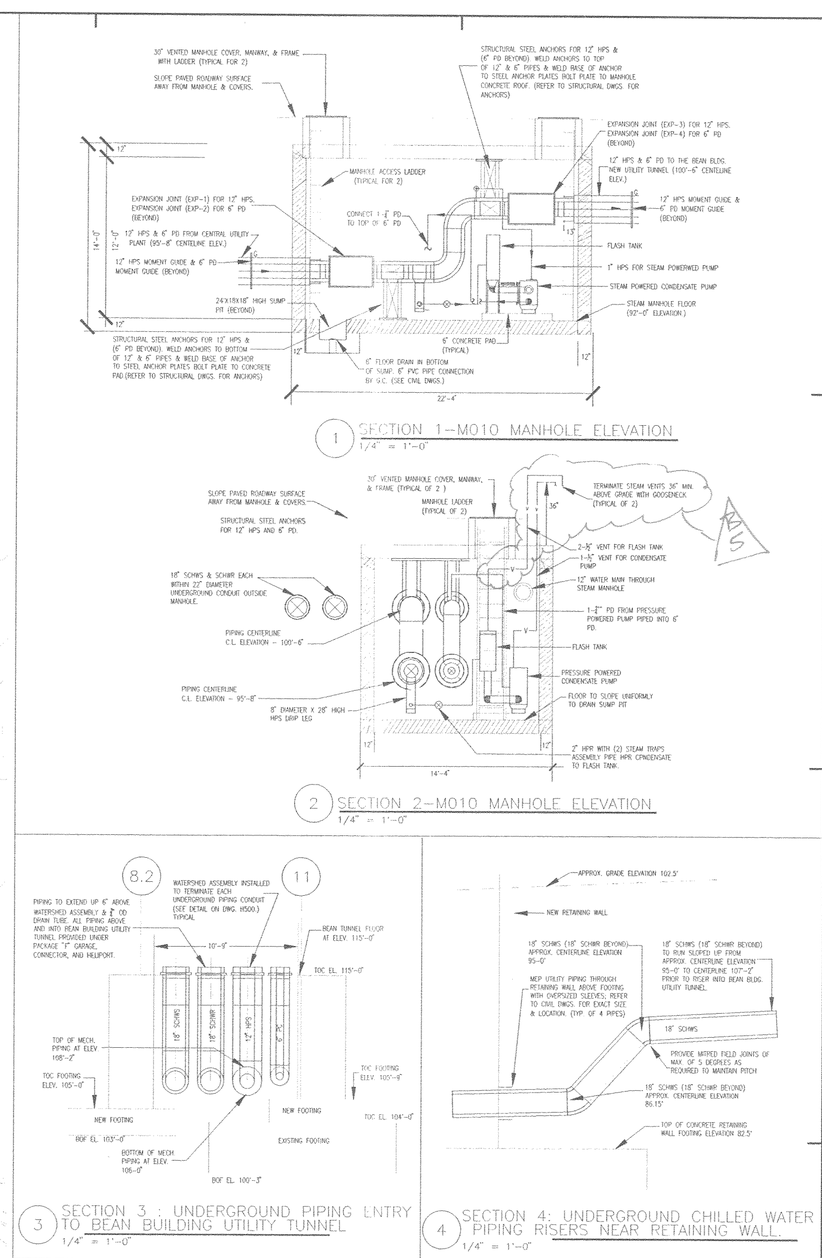

1 SECTION 1--M010 MANHOLE ELEVATION
1/4" = 1'-0"

2 SECTION 2-M010 MANHOLE ELEVATION
1/4" = 1'-0"

3 SECTION 3 : UNDERGROUND PIPING ENTRY TO BEAN BUILDING UTILITY TUNNEL
1/4" = 1'-0"

4 SECTION 4: UNDERGROUND CHILLED WATER PIPING RISERS NEAR RETAINING WALL.
1/4" = 1'-0"

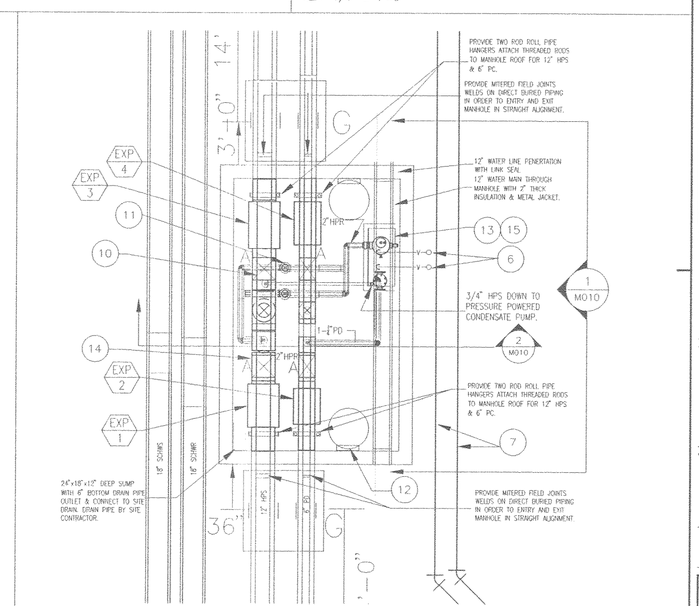

STEAM MANHOLE PLAN
1/4" = 1'-0"

General Notes:

1. CENTRAL UTILITY PLANT CONNECTING TUNNEL TO UNDERGROUND THE UNDERGROUND CLASS "A" CONDUITS (12"HPS & 6"PC) TO TERMINATE 1.5" INSIDE OF CONNECTING TUNNEL. PROVIDE LINK SEAL & TERMINATE WITH GLAND SEAL ASSEMBLY SEE DETAIL NO. 7 ON DWG. M500. THE 18"SCHWS & 18" SCHWR SHALL TERMINATE A MIN. OF 9" INSIDE TUNNEL WITH LINK SEAL & RESIN END SEAL ASSEMBLY SEE DETAIL NO. 14 ON DWG. M500. (THIS WORK WILL NEED TO BE COORDINATED WITH CUP SEE PACKAGE "G".)
2. 18"SCHWS & SCHWR PIPING TO SLOPE AT A UNIFORM GRADE WITH A MINIMUM OF 4'-6" OF COVER & SHALL PENETRATE THE NEW RETAINING WALL ABOVE THE FOOTING.
3. 18"SCHWS & 18" SCHWR PIPING SHALL RISE UP WITH (2) 45 DEGREE ELBOWS FROM ELEVATION 86.15' CENTERLINE TO 95'-0" CENTERLINE, AND CONTINUE WITH A CONSTANT PITCH UP TO APPROX. 107.167' CENTERLINE PRIOR TO BEAN UTILITY TUNNEL RISERS.
4. DROP NEW (TEMPORARY) 14" CONDENSER WATER PIPING DOWN & CONNECT TO EXISTING 14" STEEL SUPPLY & RETURN MAINS. PROVIDE NEW POLYBUTYLENE (PB) SDR-11 WEIGHT PLASTIC PIPING OR HIGH PRESSURE RUBBER HOSE FOR TEMPORARY CONDENSER WATER SERVICE. THE CONSTRUCTION MANAGER (CM) SHALL PROVIDE PHASING, MEANS & METHODS TO MAINATIN THIS TEMPORARY PIPING SERVICE UNTIL NEW CENTRAL UTILITY PLANT IS OPERTIONAL AND ALL NEW PIPING INSTALLED TO SERVE BEAN BUILDING.
5. EXISTING COOLING TOWERS & CONDENSER WATER PUMPS, AND ASSOCIATED PIPING TO REMAIN; UNTIL NEW CUP CHILLED WATER COOLING SYSTEM IS OPERTIONAL & PIPING TO BEAN BUILDING COMPLETE. (THE CM SHALL PROVIDE PHASING & SCHEDULE THE REMOVAL OF COOLING TOWER, PUMPS, & PIPING; SEE CUP PKG "G" FOR DEMOLITION.)
6. 2-½" VENT PIPE FROM FLASH TANK AND 1-½" FROM CONDENSATE PUMP TO RISE 36" ABOVE GRADE AND TERMINATE WITH A DOWNWARD GOOSENECK NEXT TO BEAN BUILDING.
7. NEW (TEMPORARY) 14" CONDENSER WATER SUPPLY & RETURN MAINS INSTALL AS CLOSE AS POSSIBLE TO BEAN BUILDING WALL. THE CONSTRUCTION MANAGER (CM) SHALL COORDINATE INSTALLATION ABOVE/BELOW GRADE AS REQUIRED & SUPPORT ON TEMPORARY STANDS OR HANGERS AS REQUIRED.
8. NEW (TEMPORARY) 14" CONDENSER WATER SUPPLY & RETURN MAINS TO DROP DOWN AND RECONNECT TO EXISTING 14" MAINS, CM TO FIELD VERIFY & COORDINATE EXACT LOCATION.
9. (2) 11" DIAMETER FUEL OIL SECONDARY CONTAINMENT CONDUITS TO PENETRATE RETAINING WALL & CUP WALL. PROVIDE ¼"X 0.3" THICK SS BANDS (3 REQUIRED) & ¼" SHEET HOT DIPPED GALVANIZED STEEL INSULATING SADDLE.
10. ANCHOR HIGHEST ELBOW OF HPS AND PD PIPES TO CEILING OF MANHOLE. THE ANCHOR FORCES ARE. 12" HPS-33,000 LBS, 6"PD-13,000 LBS.
11. (2) HP INVERTED BUCKET STEAM TRAPS WITH ASSOCIATED ASSEMBLY; SEE PIPING SCHEMATIC ON DWG. M500 PIPING, VALVES, & ACCESSORIES.
12. 30"Ø VENTED MANWAY COVER WITH ACCESS LADDER TO BOTTOM OF MANHOLE. (TYPICAL OF 2)
13. FLASH TANK WITH ALL ACCESSORIES : SEE DWG. M500 PIPING SCHEMATICFOR PIPING, VALVES, & ACCESSORIES.
14. ANCHOR LOWEST ELBOW OF HPS AND PD TO FLOOR OF MANHOLE. THE ANCHOR FORCES ARE. 12" HPS-33,000 LBS, 6" PD-13,000 LBS.
15. STEAM PRESSURE POWERED CONDENSATE PUMP SEE DWG. M700 SCHEDULE AND PIPING SCHEMATIC FOR PIPING, VALVES, & ACCESSORIES.
16. UNDERGROUND CONDUIT PIPING SHALL EXIT THE CUP CONNECTING TUNNEL AT THE FOLLOWING CENTERLINE ELEVATIONS.
    6" PD - 79'-6" ; 12"HPS: 79'-6"
    18"SCHWR: 79'-6"; 18"SCHWS: 79'-6"
    THE 12" HPS & 6" PD SHALL SLOPE UP UNIFORMLY TO STEAM MANHOLE ENTRY ELEVATION OF APPROX. 95'-8".
17. UNDERGROUND CONCRETE THRUST BLOCK WITH CONCRETE FOOTING FOR PIPING ANCHORS. THE 12" HPS ANCHORS SHALL BE CAPABLE OF RESISTING 33,000 LBS FORCE & 6" PD SHALL CAPABLE OF RESISTING 13,000 LBS FORCE (TYPICAL.)
18. FUTURE CENTRAL UTILITY PLANT EXPANSION ZONE.
19. (2) 2-1/2" FOS&FOR AND (2) 3" FOS& FOR PIPING TO RUN DIRECT BURIED WITHIN SECONDARY CONTAINMENT CONDUIT PITCHED DOWN FROM EXISTING PUMPHOUSE TO CENTRAL UTILITY PLANT. (TYPICAL FOR 2 11" DIA. SECONDARY CONDUIT WITH 2 PIPE EACH WITH LEAK DETECTION SYSTEM.
20. 18" SCHWS & SCHWR UP EACH WITHIN A 22" OD. DIA. UNDERGROUND CONDUIT, 12" HPS UP WITHIN A 26" OD. DIA. UNDERGROUND CONDUIT & A 6" PD UP WITHIN A 16.75" OD DIA. UNDERGROUND CONDUIT(12" HPS & 6" PD WITHIN OVERSIZED CONDUIT FOR 2" INCHES OF EXPANSION); AND INTO THE BEAN BUILDING UTILITY TUNNEL. REFER TO PACKAGE "F" DRAWINGS FOR CONTINUATION.

MARK	ISSUE DATE	DESCRIPTION
BID	08/31/04	BID SET

Issue Log

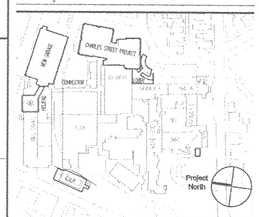

Key Plan

TRO
ARCHITECTURE
PLANNING
ENGINEERING
INTERIOR DESIGN
The Ritchie Organization
80 Bridge Street
Newton, MA 02458-1134
617-969-9400

Maine Medical Center
Pkg C - Site Utilities
Portland, Maine MMC Project No. 21846

Drawing Title
MECHANICAL-SITE PIPING PLAN

0' 0 0 0 0

Commission No.	4677	Date Issued	08/31/04
Scale	1/16"=1'-0"	Sheet Number	PKG-C
Drawn By	MC		M010
Approved By	JN		
Filename	4677MPS-010-192		

Copyright © 2004 The Ritchie Organization

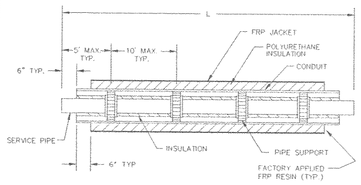

NOTES:

1. FOR 2" AND SMALLER STEEL PIPE: SQUARE ENDS
   FOR 2 1/2" AND LARGER STEEL PIPE: BEVELED ENDS
2. DETAIL APPLIES TO STEAM AND CONDENSATE (12" HPS & 6" PC)

1 UNDERGROUND CONDUIT PIPE SYSTEM DETAIL STRAIGHT ASSEMBLY

SCALE: NTS

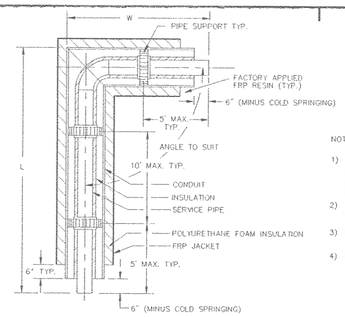

NOTE:

1) FOR 2" AND SMALLER STEEL PIPE: SQUARE ENDS
   3000 LB SOCKET WELD FITTINGS
   FOR 2 1/2" AND LARGER STEEL PIPE: BEVELED ENDS
   BUTTWELD FITTINGS
2) WELD-O-LETS OR SOCK-O-LETS
   MAY BE USED, FOR REDUCING TEES
3) PIPE BENDING IN PLACE OF WELDED
   ELBOWS MAY BE USED
4) DETAIL APPLIES TO 12" HPS & 6" PC.

2 UNDERGROUND CONDUIT PIPE SYSTEM DETAIL ELBOW ASSEMBLY

SCALE: NTS

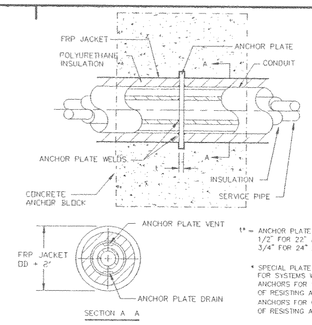

1* = ANCHOR PLATE THICKNESS
1/2" FOR 22" AND SMALLER CONDUIT
3/4" FOR 24" AND LARGER CONDUIT

* SPECIAL PLATE THICKNESS REQUIRED FOR SYSTEMS W/ EXPANSION JOINTS
ANCHORS FOR 12" HPS SHALL BE CAPABLE OF RESISTING A FORCE OF 33,000 POUNDS(LBS.)
ANCHORS FOR 6" PC SHALL BE CAPABLE OF RESISTING A FORCE OF 13,000 POUNDS(LBS.)

3 UNDERGROUND CONDUIT PIPE SYSTEM DETAIL ROUND ANCHOR ASSEMBLY

SCALE: NTS

General Notes:

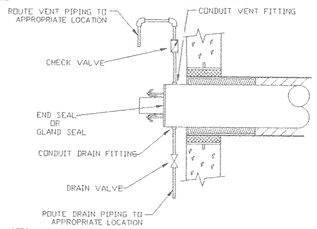

NOTES:

1. VENT AND DRAIN PIPING, FITTINGS AND VALVES SUPPLIED AND INSTALLED BY OTHERS
2. KEEP DRAIN VALVE IN THE CLOSED POSITION TO PREVENT WATER AND MOISTURE FROM ENTERING THE CONDUIT. ONLY OPEN DRAIN VALVE TO DRAIN LIQUID FROM THE CONDUIT
3). DETAIL APPLIES TO 12" HPS AND 6" PD.

4 UNDERGROUND CONDUIT PIPE SYSTEM DETAIL RECOMMENDED CONDUIT VENT & DRAIN PIPING

SCALE: NTS

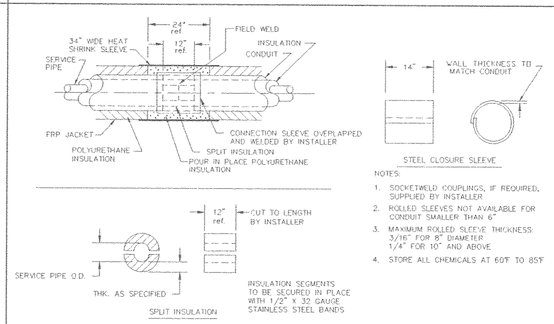

NOTES:

1. SOCKETWELD COUPLINGS, IF REQUIRED, SUPPLIED BY INSTALLER
2. ROLLED SLEEVES NOT AVAILABLE FOR CONDUIT SMALLER THAN 6"
3. MAXIMUM ROLLED SLEEVE THICKNESS: 3/16" FOR 8" DIAMETER 1/4" FOR 10" AND ABOVE
4. STORE ALL CHEMICALS AT 60°F TO 85°F

5 UNDERGROUND CONDUIT PIPE SYSTEM DETAIL FIELD JOINT ASSEMBLY ROLLED SLEEVE & HEAT SHRINK SLEEVE

SCALE: NTS

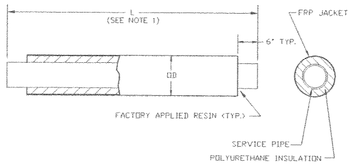

NOTES:

1. LENGTH L FOR 2 -1/2" & BELOW 20 FEET MAXIMUM.
   LENGTH L FOR 3" & ABOVE 40 FEET MAXIMUM.
2. FOR 2" AND SMALLER PIPE: SQUARE ENDS
   FOR 2 1/2" AND LARGER PIPE: BEVELED ENDS
3. DETAIL APPLIES TO 18" SCHWS & SCHWR.

6 UNDERGROUND INSULATED PIPE SYSTEM DETAIL STEEL PIPE STRAIGHT LENGTH

SCALE: NTS

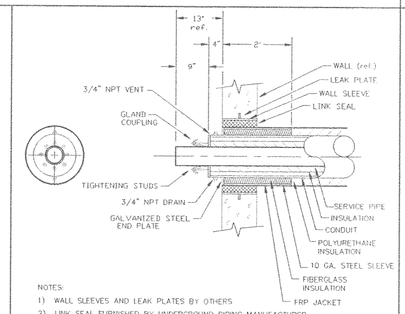

NOTES:

1) WALL SLEEVES AND LEAK PLATES BY OTHERS
2) LINK SEAL FURNISHED BY UNDERGROUND PIPING MANUFACTURER.
3). DETAIL APPLIES TO 12" HPS AND 6" PD.

7 UNDERGROUND INSULATED PIPE SYSTEM DETAIL GLAND SEAL ASSEMBLY

SCALE: NTS

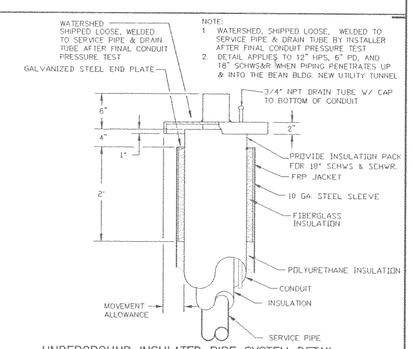

NOTE:

1. WATERSHED, SHIPPED LOOSE, WELDED TO SERVICE PIPE & DRAIN TUBE BY INSTALLER AFTER FINAL CONDUIT PRESSURE TEST
2. DETAIL APPLIES TO 12" HPS, 6" PD, AND 18" SCHWS&R WHEN PIPING PENETRATES UP & INTO THE BEAN BLDG. NEW UTILITY TUNNEL

8 UNDERGROUND INSULATED PIPE SYSTEM DETAIL WATERSHED ASSEMBLY

SCALE: NTS

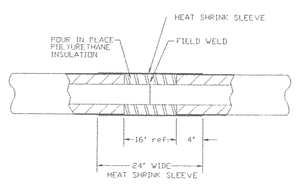

NOTES:

1. SOCKET WELD COUPLINGS, IF REQUIRED SUPPLIED BY INSTALLER
2. THE FOLLOWING FIELD JOINT MATERIAL SUPPLIED BY PERMA-PIPE
   POUR IN PLACE POLYURETHANE INSULATION
   MOLD FOR POUR IN PLACE
   HEAT SHRINK SLEEVE
   STORE ALL CHEMICALS AT 60°F TO 85°F
3. DETAIL APPLIES TO 18" SCHWS & SCHWR.

9 UNDERGROUND INSULATED PIPE SYSTEM DETAIL FIELD JOINT, HEAT SHRINK SLEEVE

SCALE: NTS

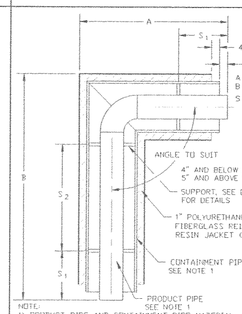

NOTE:
1) PRODUCT PIPE AND CONTAINMENT PIPE MATERIAL, GRADE AND WALL THICKNESS TO BE IN ACCORDANCE WITH CUSTOMER SPECIFICATIONS

10 UNDERGROUND FUEL OIL PIPE SYSTEM DETAIL ELBOW ASSEMBLY

SCALE: NTS

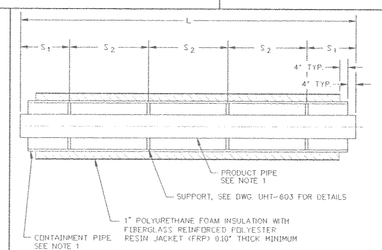

NOTES:
1) PRODUCT PIPE AND CONTAINMENT PIPE MATERIAL, GRADE AND WALL THICKNESS TO BE IN ACCORDANCE WITH CUSTOMER SPECIFICATIONS
2) DETAIL APPLIES TO FOS & FOR FOR BOILERS & GENERATORS.

S = SPACE BETWEEN SUPPORTS
S_1 = MAXIMUM 5'
S_2 = MAXIMUM 10'

SERVICE PIPE SIZE	L
2 1/2" TO 36"	39' MAXIMUM

11 UNDERGROUND FUEL OIL PIPE SYSTEM DETAIL STRAIGHT LENGHT

SCALE: NTS

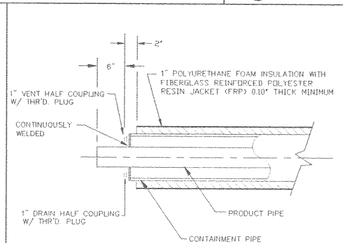

12 UNDERGROUND FUEL OIL PIPE SYSTEM DETAIL END SEAL

SCALE: NTS

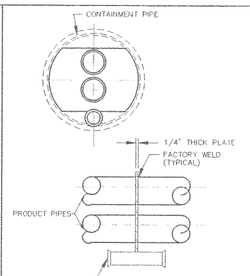

13 UNDERGROUND FUEL OIL PIPE SYSTEM SUPPORT DETAIL

SCALE: NTS

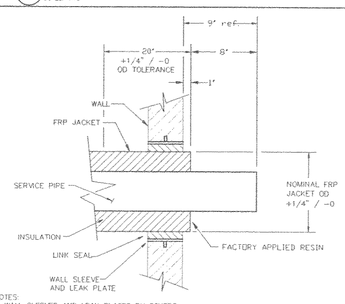

NOTES:
1. WALL SLEEVES AND LEAK PLATES BY OTHERS
2. LINK SEAL FURNISHED BY UNDERGROUND PIPING MANUFACTURER.
3. DETAIL APPLIES TO 18" SCHWS & SCHWR.

14 UNDERGROUND INSULATED PIPE SYSTEM DETAIL RESIN END SEAL

SCALE: NTS

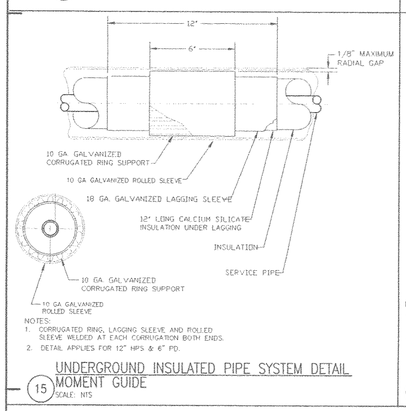

NOTES:
1. CORRUGATED RING, LAGGING SLEEVE AND ROLLED SLEEVE WELDED AT EACH CORRUGATION BOTH ENDS.
2. DETAIL APPLIES FOR 12" HPS & 6" PD.

15 UNDERGROUND INSULATED PIPE SYSTEM DETAIL MOMENT GUIDE

SCALE: NTS

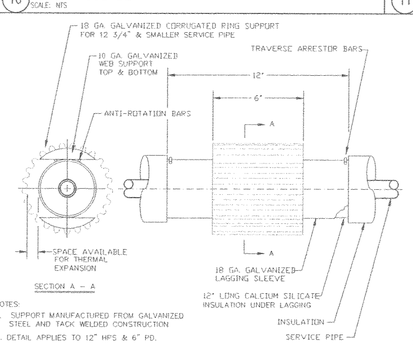

NOTES:
1. SUPPORT MANUFACTURED FROM GALVANIZED STEEL AND TACK WELDED CONSTRUCTION
2. DETAIL APPLIES TO 12" HPS & 6" PD.

16 UNDERGROUND INSULATED PIPE SYSTEM DETAIL PIPE SUPPORT

SCALE: NTS

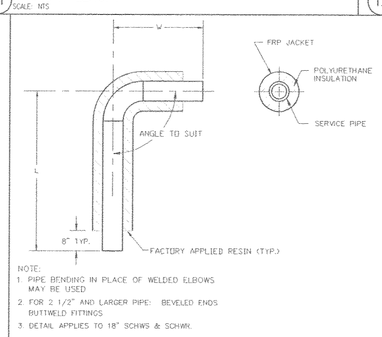

NOTE:
1. PIPE BENDING IN PLACE OF WELDED ELBOWS MAY BE USED
2. FOR 2 1/2" AND LARGER PIPE: BEVELED ENDS BUTTWELD FITTINGS
3. DETAIL APPLIES TO 18" SCHWS & SCHWR.

17 UNDERGROUND INSULATED PIPE SYSTEM DETAIL ELBOW ASSEMBLY

SCALE: NTS

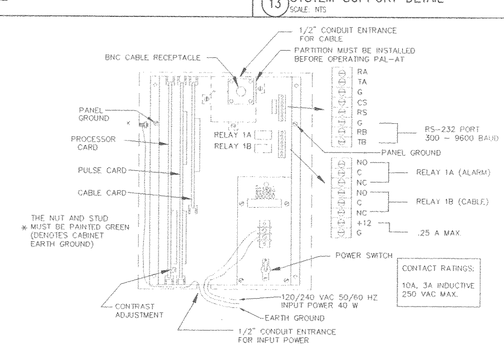

NOTE:
1. ELECTRICAL POWER WIRING OF THE LEAK DETECTION SYSTEM SHALL BE PROVIDED UNDER THE CENTRAL UTILITY PROJECT PACKAGE "G". THE LEAK DETECTION PANEL SHALL BE FURNISHED UNDER THIS PACKAGE "C" FOR INSTALLATION UNDER CUP PKG. "G".

18 UNDERGROUND FUEL OIL PIPE SYSTEM DETAIL-LEAK DETECTION SYSTEM WIRING DIAGRAM

SCALE: NTS

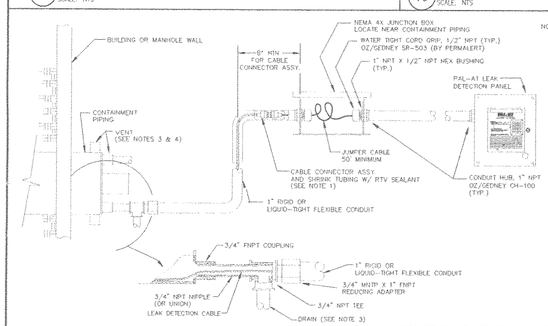

NOTES

1. ALLOW SLACK IN LEAK DETECTION CABLE TO INSTALL AND SERVICE CONNECTOR
2. PIPE AND CONDUIT FITTINGS SUPPLIED BY INSTALLER
3. SEE RECOMMENDED VENT AND DRAIN DETAIL.
4. ALTERNATE VENT & DRAIN LOCATIONS ON CONTAINMENT PIPE OD WHEN THERE IS INSUFFICIENT ROOM ON THE END PLATE
5. LOCATE JUNCTION BOX HIGHER THAN CONTAINMENT DRAIN.
6. PROVIDE STEEL NIPPLE INCREASER WITH CAP TO SEAL & PROTECT ENDS OF LEAK DETECTION CABLES AT END SEAL TERMINATION IN CUP & PUMP HOUSE. THE ELECTRICAL "J" BOX END OF CIRCUIT IN PUMP HOUSE AND "J" BOX & LEAK DETECTION PANEL IN CUP SHALL BE FURNISHED UNDER PKG. "C", WITH THE INSTALLATION AND WIRING PROVIDED UNDER CUP PACKAGE "G".

19 UNDERGROUND FUEL OIL PIPE SYSTEM DETAIL-LEAK DETECTION SYSTEM CABLE CONNECTION START OF RUN

SCALE: NTS

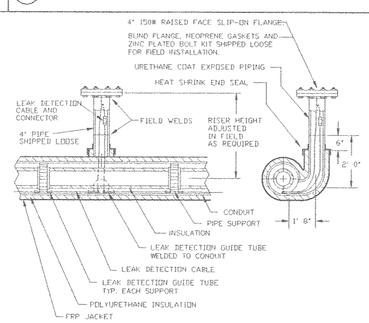

20 UNDERGROUND CONDUIT PIPE SYSTEM DETAIL LEAK DETECTION STANDARD PULLPORT ASSEMBLY

SCALE: NTS

MARK	ISSUE DATE	DESCRIPTION
BID	08/31/04	BID SET

Issue Log

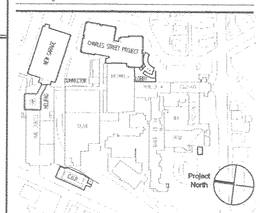

Key Plan

TRO
ARCHITECTURE
PLANNING
ENGINEERING
INTERIOR DESIGN
The Fitzhugh Organization
80 Bridge Street
Newton, MA 02458-1134
617-969-9400

Maine Medical Center
Pkg C - Site Utilities
Portland, Maine MMC Project No. 21846

Drawing Title
MECHANICAL SCHEDULES, SCHEMATICS, AND DETAILS

0' 0 0 0 0

Commission No.	4677	Date Issued	08/31/04
Scale	NTS	Sheet Number	PKG-C
Drawn By	MJC		M500
Approved By	JN		
Filename	4677M500		

Copyright © 2004 The Fitzhugh Organization

General Notes:

FLASH TANK SCHEDULE

ITEM	MANUFACTURER	MODEL	LOCATION	CAPACITY LB/HR	FLASH STEAM LB/HR	FLASH STEAM PRESSURE, PSIG	INLET SIZE	OUTLET SIZE	VENT SIZE	LENGTH	DIAMETER	REMARKS
FT-1	SPIRAX SARCO	FM3	STEAM MANHOLE	2,000	500	2	2-1/2	1-1/2	2-1/2	47"	6	

NOTES: 1. PROVIDE VERTICAL FLASH TANK OF MILD STEEL CONSTRUCTION WITH ANSI 150 FLANGES AND ASME CODE STAMPED FOR 150 PSIG STEAM SERVICE.
2. FLASH TANK SHALL BE PROVIDED WITH 1/2" NPT CONNECTION FOR FITTING OF A PRESSURE GAUGE.
3. FLASH TANK SHALL BE PROVIDED WITH 3/4" NPT CONNECTION FOR FITTING OF A SAFETY RELIEF VALVE.

EXPANSION JOINT SCHEDULE

ITEM	MANUFACTURER	MODEL	MOVEMENT AXIAL	NO. OF CORRUG	SIZE DIA	SIZE LENGTH	FLUID TEMP	MAX PRESSURE	SPRING RATE LBS./INCH/CORRUG	NOTES
EXP-1	METRAFLEX	MC-WELD ENDS	4.25"	7	12"	38-1/2"	400 F	100 PSIG	4200 LB/IN	
EXP-2	METRAFLEX	MC-WELD ENDS	3.75"	5	6"	32"	250 F	50 PSIG	3500 LB/IN	
EXP-3	METRAFLEX	MC-WELD ENDS	6.0"	8	12"	41-3/4"	400 F	100 PSIG	4200 LB/IN	
EXP-4	METRAFLEX	MC-WELD ENDS	5.25"	7	6"	38-1/2"	250 F	50 PSIG	3500 LB/IN	

NOTES: 1. BASED ON MODEL MC -SELF EQUALIZING RING CONTROLLED.

PRESSURE POWERED CONDENSATE PUMP SCHEDULE

ITEM	MANUFACTURER	MODEL	LOCATION	TYPE UNIT	COND. CAPACITY	MOTIVE STEAM INLET PRESS.	DISCHARGE BACK PRESS.	REMARKS
PCP-1	SPIRAX-SARCO	PPF-2"X2"	STEAM MANHOLE	SINGLE PUMP	1,850 LBS/HR	100 PSI	40 PSI	SEE NOTES

NOTES: 1. SINGLE PUMP PACKAGE FABRICATED STEEL BODY AND COVER ASME LABELED FOR 125 PSIG AND MAX. OPERATING TEMP. OF 650 F.
2. PPCP-1 SHALL BE SIZE 2"X2" WITH 1" CHECK VALVE AND PIPING SIZE ; AND WITH A MINIMUM FILLING HEAD OF 12 INCHES.

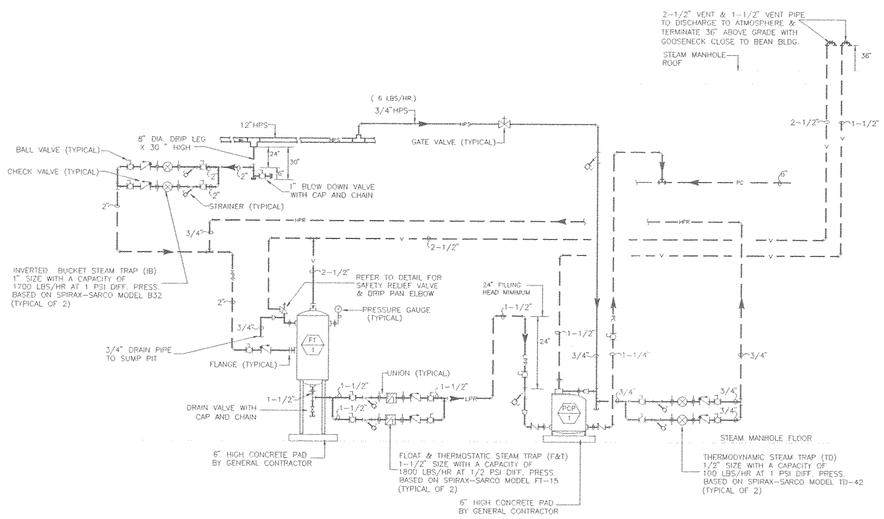

STEAM MANHOLE - CONDENSATE PIPING SCHEMATIC

SCALE: NOT TO SCALE

MARK	ISSUE DATE	DESCRIPTION
BID	08/31/04	BID SET

Issue Log

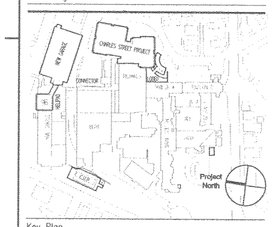

Key Plan

TRO
Architecture
Planning
Engineering
Interior Design
The Ritchie Organization
80 Bridge Street
Newton, MA 02459-1134
617-969-9400

Maine Medical Center
Pkg C - Site Utitlities
Portland, Maine MMC Project No. 21846

Drawing Title
MECHANICAL SCHEDULES, SCHEMATICS, AND DETAILS

0' 0 0 0 0

Commission No.	4677	Date Issued	08/31/04
Scale	NTS	Sheet Number	PKG-C
Drawn By	MJC		
Approved By	JN		M700
Filename	4677M700		

Copyright © 2004 The Ritchie Organization

GENERAL NOTES

SPECIFICATIONS	REFER TO PROJECT SPECIFICATIONS FOR DETAILED REQUIREMENTS FOR MATERIAL AND WORKMANSHIP.
SHOP DRAWINGS	THE CONTRACTOR SHALL SUBMIT SHOP DRAWINGS AND COORDINATION DRAWINGS FOR THE ENGINEER'S APPROVAL AS STATED IN THE SPECIFICATIONS.
SIMILAR CONDITIONS	IN THE EVENT THAT CERTAIN DETAILS OF THE CONSTRUCTION ARE NOT FULLY SHOWN OR NOTED ON THE DRAWINGS, THEIR CONSTRUCTION SHALL BE OF THE SAME TYPE AS FOR SIMILAR CONDITIONS WHICH ARE SHOWN AND NOTED, SUBJECT TO THE STRUCTURAL ENGINEER'S APPROVAL. SEE MECHANICAL, ELECTRICAL, PLUMBING, FIRE PROTECTION, & TELECOMMUNICATION DRAWINGS FOR THE FOLLOWING: A. PIPE AND DUCT RUNS, SLEEVES, HANGERS, TRENCHES, WALL AND SLAB OPENINGS, ETC., EXCEPT AS SHOWN OR NOTED. B. ELECTRICAL CONDUIT RUNS, BOXES, OUTLETS IN WALLS AND SLABS. C. CONCRETE INSERTS FOR ELECTRICAL, MECHANICAL OR PLUMBING FIXTURES. D. SIZE AND LOCATION OF MACHINE OR EQUIPMENT BASES, ANCHOR BOLTS FOR MOTOR MOUNTS, EXCEPT AS SHOWN OR NOTED.
ELEVATIONS & DIMENSIONS	ALL ELEVATIONS AND DIMENSIONS SHOWN FOR NEW CONSTRUCTION ARE BASED ON THE DESIGN DRAWINGS FOR THE EXISTING BUILDINGS. FIELD VERIFY ALL ELEVATIONS AND DIMENSIONS BEFORE PROCEEDING WITH CONSTRUCTION.
BUILDING CODE	BOCA –1999

A – DESIGN LOADS

A1) LIVE — AASHTO HS-20

A2) DEAD — ALL PERMANENT STATIONARY CONSTRUCTION.

A3) SEISMIC — USE GROUP I-2 WITH EMERGENCY TREATMENT FACILITIES
SEISMIC HAZARD EXPOSURE GROUP III
SEISMIC PERFORMANCE CATEGORY C
$A_V = A_A = 0.11$
SITE COEFFICIENT, S = 1.2

B – FOUNDATIONS

B1) GEOTECHNICAL REPORTS — THE CONTRACTOR SHALL BE RESPONSIBLE FOR READING, UNDERSTANDING & IMPLEMENTING THE RECOMMENDATIONS OUTLINED IN THE FOLLOWING GEOTECHNICAL REPORTS BY S.W. COLE, INC.:

I) "GEOTECHNICAL ENGINEERING SERVICES PROPOSED PARKING GARAGE, MAINE MEDICAL CENTER FACILITY, CRESCENT AND CONGRESS STREETS, PORTLAND, MAINE", DATED 31 MARCH 2004.
II) "GEOTECHNICAL ENGINEERING SERVICES PRELIMINARY INVESTIGATION PROPOSED PARKING GARAGE, MAINE MEDICAL CENTER FACILITY CRESCENT AND CONGRESS STREETS, PORTLAND, MAINE", DATED 2 APRIL 2002.
III) "GEOTECHNICAL ENGINEERING INVESTIGATION PROPOSED MEDICAL OFFICE BUILDING AND PARKING GARAGE WOMEN AND INFANTS FACILITY CHARLES STREET, PORTLAND, MAINE", DATED 29 MARCH 2002.

COPIES OF THE GEOTECHNICAL REPORT ARE AVAILABLE FROM THE PROJECT ARCHITECT. WHERE RECOMMENDATIONS IN THESE REPORTS VARY FROM INFORMATION CONTAINED IN THESE DRAWINGS & THE PROJECT SPECIFICATIONS, THE MORE STRINGENT RECOMMENDATIONS SHALL GOVERN.

B2) SOIL BEARING — CONCRETE SPREAD & STRIP FOOTINGS ARE DESIGNED FOR AN ALLOWABLE BEARING PRESSURE OF 4,000 PSF AT A DEPTH OF 4.5 FEET BELOW THE EXISTING GRADE. BEAR ALL FOOTINGS ON UNDISTURBED SOIL, U.O.N.

B3) EXCAVATION — ALL FOUNDATION EXCAVATION TO BE INSPECTED BY THE GEOTECHNICAL ENGINEER. EXCAVATE TO LINES AND GRADES TO PROPERLY INSTALL FOUNDATIONS ON UNDISTURBED SOIL APPROVED BY THE GEOTECHNICAL ENGINEER FOR THE REQUIRED BEARING CAPACITY. THE ELEVATIONS SHOWN ON THE DRAWINGS ARE ANTICIPATED AND ACTUAL ELEVATIONS ARE TO BE ESTABLISHED IN THE FIELD BY THE GEOTECHNICAL ENGINEER, BUT IN NO CASE SHALL THE BOTTOM OF FOOTING BE LOCATED LESS THAN 4.5 FEET BELOW THE LOWEST ADJACENT SURFACE EXPOSED TO FREEZING. THE DIFFERENCE IN ELEVATION BETWEEN THE BOTTOMS OF ADJACENT FOOTINGS SHALL BE EQUAL TO OR LESS THAN THE HORIZONTAL DISTANCE BETWEEN THEM. ANY ADJUSTMENT OF FOOTING ELEVATIONS DUE TO FIELD CONDITIONS MUST HAVE THE PRIOR APPROVAL OF THE ENGINEER.

B4) UTILITIES AND OTHER UNDERGROUND STRUCT. — FOOTINGS TO BEAR BELOW AN IMAGINARY REFERENCE LINE DRAWN UPWARD AND OUTWARD ON A 1V:1H SLOPE FROM THE BOTTOM OF ANY ADJACENT UTILITIES OR OTHER UNDERGROUND STRUCTURES.

B5) DEWATERING SYSTEM — THE CONTRACTOR SHALL BE RESPONSIBLE FOR TEMPORARY DEWATERING OF ALL EXCAVATIONS AS NECESSARY TO ALLOW FOR CONSTUCTION OF BELOW GRADE MANHOLES, VAULTS, UTILITIES, ETC. DEWATERING SHALL BE MAINTAINED UNTIL NEW CONSTRUCTION HAS BEEN WATER PROOFED (IF REQUIRED) IN ACCORDANCE WITH THE ARCH. DRAWINGS AND PROJECT SPECIFICATIONS.

B6) FOOTING SUBGRADE PREPARATION AND FILL — FOLLOW RECOMMENDATIONS OF GEOTECHNICAL REPORT INCLUDED IN PROJECT MANUAL. PLACE ALL SPREAD AND STRIP FOOTINGS ON 2" LEAN CONCRETE "MUD" MAT OR A LAYER OF COMPACTED GRANULAR FILL. ALL FOOTINGS SHALL EXTEND AT LEAST 4'-6" BELOW GRADE FOR FROST PROTECTION.

B7) MANHOLE SLAB SUBGRADE PREPARATION AND FILL — FOLLOW RECOMMENDATIONS OF GEOTECHNICAL REPORT INCLUDED IN PROJECT MANUAL. PLACE MANHOLE FLOOR SLAB ON 12" BED OF CRUSHED STONE OVER FILTER FABRIC.

B8) BACKFILL UNDER SLAB-ON-GRADE — PROOF-ROLL EXISTING SOILS PER SPECIFICATION #02200 "EARTHWORK". BACKFILL WHERE REQUIRED BELOW SLABS-ON-GRADE WITH APPROVED GRANULAR SOIL PLACED IN 6 IN. LAYERS AND COMPACTED TO 95% DENSITY AT OPTIMUM MOISTURE CONTENT AS DEFINED BY ASTM D-1557, METHOD D. USE A POLYETHYLENE VAPOR BARRIER BETWEEN THE COMPACTED GRANULAR FILL AND THE SLAB-ON-GRADE.

B9) BACKFILL AGAINST CANTILEVERED RETAINING WALLS — DO NOT BACKFILL AGAINST RETAINING WALLS UNTIL WALL CONCRETE IS AT FULL DESIGN STRENGTH. BACKFILL WITH APPROVED MATERIAL PLACED IN 6 IN. LAYERS AND COMPACTED TO 95% DENSITY AT OPTIMUM MOISTURE CONTENT AS DEFINED BY ASTM D-1557, METHOD D.

B10) BACKFILL AGAINST FOUNDATION WALLS — DO NOT BACKFILL AGAINST FOUNDATION WALLS UNTIL WALL CONCRETE IS AT FULL DESIGN STRENGTH AND UNTIL SLABS AT BASE AND TOP OF WALL ARE IN PLACE, AND HAVE REACHED THEIR DESIGN STRENGTH. U.O.N. IN GEOTECHNICAL REPORT, BACKFILL WITH APPROVED MATERIAL PLACED IN 6 IN. LAYERS AND COMPACTED TO 95% DENSITY AT OPTIMUM MOISTURE CONTENT AS DEFINED BY ASTM D-1557, METHOD D.

B11) FOUNDATION PLACEMENT & PROTECTION — PROTECT ALL SOIL BEARING SURFACES FROM FREEZING BEFORE AND AFTER FOUNDATION CONSTRUCTION. IF CONSTRUCTION IS PERFORMED DURING FREEZING WEATHER, BACKFILL FOOTINGS TO A SUFFICIENT DEPTH (UP TO FOUR AND ONE HALF FEET) AS SOON AS POSSIBLE AFTER CONSTRUCTION. ALTERNATIVELY, USE APPROVED INSULATING BLANKETS OR OTHER APPROVED MEANS FOR PROTECTION AGAINST FREEZING. DO NOT PLACE FOUNDATION CONCRETE IN WATER OR ON FROZEN GROUND. PROTECT IN-PLACE FOUNDATIONS AND SLABS FROM FROST PENETRATION UNTIL THE PROJECT IS COMPLETE.

B12) DE-ICING — DO NOT USE SALT OR CHLORIDE-COMPOUNDS TO DE-ICE SITE.

D – CAST-IN-PLACE CONCRETE

D1) CONCRETE STRENGTH — PROVIDE THE FOLLOWING 28 DAY COMPRESSIVE STRENGTH FOR FIELD CONCRETE:
I) 4,000 PSI (MIN.) NORMAL WEIGHT FOR ALL CAST-IN-PLACE CONCRETE FOUNDATIONS, COLUMNS, BASEMENT WALLS, STRUCTURAL SLABS AND SLABS-ON-GRADE.
II) 1,000 PSI (MIN.) NORMAL WEIGHT FOR ALL LEAN CONCRETE USED IN MUD MATS.

D2) PORTLAND CEMENT — ASTM C150, TYPE II. WATER CEMENT RATIO AS REQUIRED FOR DESIGN STRENGTH.

D3) AGGREGATE — NORMAL WEIGHT: ASTM C33, WITH MAXIMUM SIZE OF 1 IN.

D4) WATER — POTABLE.

D5) SLUMP — 4 INCH MAXIMUM. PRIOR TO ADDITION OF ADMIXTURES.

D6) ADMIXTURES — SEE SPECIFICATIONS. ASTM C260 AIR-ENTRAINING AGENT AS REQUIRED FOR A TOTAL ENTRAINED AIR CONTENT OF 6% (±1%) FOR ALL CONCRETE EXPOSED TO FREEZING. ASTM C494 WATER REDUCING AGENT IN ALL CONCRETE. DO NOT USE CALCIUM CHLORIDE.

D7) STEEL REINFORCEMENT — ASTM A615 GRADE 60. ASTM A185 FOR WELDED WIRE FABRIC (WWF). USE FLAT SHEETS ONLY (NO ROLLS) EPOXY COATED REINF. AND ACCESSORIES SHALL BE USED FOR ALL CONCRETE PLACED BELOW OR ADJACENT TO ROADWAYS. PROVIDE #6 CHAIR BARS, HIGH CHAIRS, TIES, CLIPS, SLAB BOLSTERS AND OTHER ACCESSORIES WHERE NOT SPECIFIED ON THE DRAWINGS IN ACCORDANCE WITH MANUAL OF STANDARD PRACTICE FOR DETAILING REINFORCED CONCRETE STRUCTURES, ACI 315 OR CRSI-WRSI MANUAL OF STANDARD PRACTICE. USE PLASTIC TIPS ON ALL CHAIRS PLACED ON THE SIDES OF CONCRETE FORMWORK. FIELD WELDING OF CROSSING BARS ("TACK" OR "SPOT" WELDING) IS NOT PERMITTED. DO NOT CUT BARS OR OMIT BARS BECAUSE OF SLEEVES OR OPENINGS IN FLOORS, EXCEPT AS SPECIFICALLY DETAILED IN DRAWINGS.

D8) OPENINGS — OPENINGS, POCKETS, ETC. LARGER THAN 6" SHALL NOT BE PLACED IN CONCRETE SLABS, DECKS, OR WALLS, UNLESS SPECIFICALLY DETAILED ON THE STRUCTURAL DRAWINGS.

D9) REINFORCEMENT AT OPENINGS — PROVIDE 2 – #6 AT EACH SIDE OF ALL OPENINGS IN WALLS AND SLABS AND EXTEND 2 FT-6 IN. BEYOND THE OPENING OR AS DETAILED, EXCEPT VERTICAL BARS AT SIDES OF OPENINGS IN WALLS ARE TO EXTEND FROM FLOOR TO FLOOR. BARS MAY BE MOVED ASIDE AT OPENINGS OR SLEEVES, BUT DO NOT CUT OR OMIT.

D10) MINIMUM CONCRETE COVER

CONCRETE PLACED AGAINST EARTH:	3 IN.
SLABS-ON-GRADE BOTTOM:	1-1/2 IN.
SLABS-ON-GRADE TOP:	1 IN.
SLABS-ON-GRADE TOP EXPOSED TO WATER OR WEATHER:	2 IN.
FORMED CONCRETE EXPOSED TO EARTH, WATER OR WEATHER:	2 IN.
FORMED SLABS, TOP AND BOTTOM:	1 IN.
INTERIOR FACES OF WALLS:	1 IN.
COLUMNS OR PIERS (MAIN REINFORCEMENT):	1-1/2 IN.

D11) WALLS AND GRADE BEAMS — PLACE WALLS AND GRADE BEAMS IN LEVEL, FULL HEIGHT LIFTS WITH CONSTRUCTION JOINTS WHERE INDICATED ON ARCHITECTURAL AND STRUCTURAL DRAWINGS. PROVIDE OPENINGS FOR WATER, ELECTRICAL, AND OTHER SERVICES AS REQUIRED. PROVIDE KEYS AND DOWELS AT ALL CONSTRUCTION JOINTS.

D12) SPLICING OF REINFORCEMENT — AS SHOWN IN TABLE ON THIS SHEET, BUT NOT LESS THAN 40 BAR DIAMETERS FOR SLABS AND BEAM BOTTOM BARS, AND NOT LESS THAN 48 BAR DIAMETERS FOR WALLS AND BEAM TOP STEEL. PROVIDE A LAP OF 8 IN OR 1-1/2 SPACES, WHICHEVER IS LARGER, FOR WWF. TIE WIRES TOGETHER AT LAP.

D13) MINIMUM REINFORCEMENT — REINFORCE ALL WALLS LESS THAN 8" THICK WITH AT LEAST #4 @ 12 IN. EACH WAY EACH FACE AND 2 – #6 EACH EDGE, UON. REINFORCE ALL WALLS 8" TO 12" THICK WITH AT LEAST #5@12" O.C., E.W., E.F. W/ 2-#7 EACH EDGE, UON. REINFORCE ALL WALLS THICKER THAN 12" WITH AT LEAST #6@12" O.C., E.W., E.F. W/ 2-#8 EACH EDGE, UON. IN SLABS, PROVIDE AT LEAST 0.0018 TIMES THE AREA OF CONCRETE IN EACH DIRECTION. REINFORCE ALL SLAB-ON-GRADE WITH MINIMUM W5xW5-6x6

D14) SHOP DRAWINGS — SUBMIT FOR ENGINEER'S APPROVAL COMPLETE BENDING AND PLACING DETAILS OF ALL REINFORCING STEEL INCLUDING WELDED WIRE FABRIC, INDICATING POSITION OF SPLICES. INCLUDE ACCESSORY DRAWINGS. INCLUDE PRECISE LOCATIONS OF ALL SLEEVES CAST INTO CONCRETE TO ACCOMMODATE PLUMBING AND ELECTRICAL WORK.

D15) STANDARD SPECIFICATIONS — COMPLY WITH THE LATEST RECOMMENDATIONS AND SPECIFICATIONS OF THE AMERICAN CONCRETE INSTITUTE:

ACI 301	STRUCTURAL CONCRETE FOR BUILDINGS
ACI 302	CONCRETE FLOOR AND SLAB CONSTRUCTION
ACI 304	MEASURING, MIXING, TRANSPORTING AND PLACING CONCRETE
ACI 305	HOT WEATHER CONCRETING
ACI 306	COLD WEATHER CONCRETING
ACI 315	DETAILING REINFORCING STEEL
ACI 318	GENERAL DESIGN OF ITEMS NOT OTHERWISE SPECIFIED
ACI 347	FORMWORK
CRSI	MANUAL OF STANDARD PRACTICE

D16) CONSTRUCTION JOINTS — PROVIDE KEYS AND DOWELS AT ALL CONSTRUCTION JOINTS. PROVIDE DOWELS WITH AN AREA EQUAL TO THE WALL OR SLAB REINF, BUT NOT LESS THAN 0.003 TIMES THE CONCRETE CROSS SECTIONAL AREA AT THE CONSTRUCTION JOINT. SUBMIT THE PROPOSED LOCATION OF CONSTRUCTION JOINTS TO THE DESIGNER FOR APPROVAL. MAXIMUM SPACING OF CONSTRUCTION JOINTS TO BE 60 FT. FOR WALLS AND STRUCTURAL FLOORS AND 80 FT. FOR SLABS ON GRADE.

D17) FOUNDATION DOWELS — PROVIDE HOOKED DOWELS TO MATCH SIZE AND SPACING OF LONGITUDINAL BARS IN WALLS UON.

D18) SURFACE TREATMENT — ROUGHEN ALL EXISTING CONCRETE SURFACES COMMON WITH NEW CONCRETE TO AN AMPLITUDE OF 1/4" (MIN.).

D19) STRUCTURAL TESTING & INSPECTION — A MINIMUM OF THREE (3) CYLINDERS SHALL BE TAKEN NOT LESS THAN ONCE A DAY NOR LESS THAN ONCE FOR 100 CUBIC YARDS OF CONCRETE FOR COMPRESSIVE STRENGTH TESTING. TESTING IS TO BE PAID FOR BY THE OWNER. THE CONTRACTOR SHALL NOTIFY THE ENGINEER OF RECORD AT LEAST 24 HOURS PRIOR TO CASTING ANY CONCRETE SO THAT STRUCTURAL TESTING & INSPECTION CAN BE COORDINATED. ABSOLUTELY NO CONCRETE IS TO BE CAST PRIOR TO REBAR BEING INSPECTED AND APPROVED.

D20) EMBEDDED ITEMS — ALL CONDUIT, PIPING, DUCTWORK, ETC. TO BE EMBEDDED WITHIN CIP SLABS, WALLS, BEAMS OR COLUMNS SHALL BE CLEARLY SHOWN ON THE SHOP DRAWINGS AND SHALL BE SUBJECT TO APPROVAL BY THE EOR. APPROVED EMBEDDED ITEMS SHALL BE LOCATED AND EVENLY DISTRIBUTED IN SUCH A MANNER TO PREVENT ADVERSELY AFFECTING THE STRENGTH OF CONCRETE MEMBERS.

D – CAST-IN-PLACE CONCRETE (CONTINUED)

D21) FOOTING SUBGRADE — NO CONCRETE FOOTING SHALL BE POURED UNTIL SUBGRADE FOR SAME HAS BEEN APPROVED BY A LICENSED PROFESSIONAL ENGINEER.

D22) BASE PLATE GROUTING — 8000 PSI 28-DAY COMPRESSIVE STRENGTH.

D23) CURING COMPOUNDS — DO NOT USE CURING COMPOUNDS WITHOUT WRITTEN APPROVAL FROM THE ENGINEER.

D24) SHEAR KEYS — UNLESS OTHERWISE NOTED ON THE DRAWINGS, SHEAR KEYS BELOW WALL BOTTOMS SHALL BE 4" WIDE BY 3" DEEP. SHEAR KEYS AT WALL TOPS SHALL BE 3" WIDE BY 2" DEEP. DO NOT USE EPS MATERIAL FOR FORMING KEYS UNLESS IT IS FIRMLY ATTACHED TO RIGID BACKUP MATERIALS.

D25) HOUSEKEEPING PADS AND CURBS — PADS AND CURBS MAY BE SHOWN ON PLAN IN CERTAIN INSTANCES FOR REFERENCE ONLY. SEE ARCHITECTURAL AND MECHANICAL DRAWINGS AND SPECIFICATIONS AND COORDINATE WITH EQUIPMENT MANUFACTURER'S REQUIREMENTS AND LOCATION. USE SAME CONCRETE AS BASE SLAB U.O.N. MAXIMUM PAD THICKNESS IS 6 INCHES, U.O.N.

D26) EPOXY DOWELS AND ANCHORS — USE HILTI HSE 2421 EPOXY ADHESIVE ANCHOR SYSTEM, OR APPROVED EQUAL, FOR ALL EPOXY DOWELS AND ANCHORS.

D27) UNDERCUT ANCHORS — USE HILTI HDA-P UNDERCUT ANCHOR, OR APPROVED EQUAL FOR ALL UNDERCUT ANCHORS. ALL ANCHORS SHALL BE GALVANIZED, UON, TYP.

F – STRUCTURAL STEEL

F1) STRUCTURAL SHAPES — WIDE FLANGE SHAPES AND CHANNELS: ASTM A992, OR ASTM A572 GRADE 50 (F_Y = 50,000 PSI) ANGLES, BARS AND PLATES: ASTM A36 UON

F2) HOLLOW STRUCTURAL SECTIONS (HSS) — ASTM A500 – GRADE B (F_Y = 46,000 PSI).

F3) PIPE — ASTM A53 TYPE E GRADE B OR ASTM A501

F4) ANCHOR BOLTS — ASTM A307 OR ASTM F1554 GRADE 36 BOLTS UON ON THE DRAWINGS.

F5) CORROSION PROTECTION — ALL STRUCTURAL STEEL ASSOCIATED WITH BELOW-GRADE MANHOLE SHALL BE HOT-DIP GALVANIZED, UON, TYP.

F6) WELDING ELECTRODES — CONFORM TO AWS SPECIFICATIONS FOR ELECTRODES BASED ON WELDING PROCESS AND THE TYPE AND GRADE OF STEEL.

F7) ERECTION — PROVIDE ANCHOR BOLTS, ERECTION BOLTS, STEEL WEDGES, THREADED SCREWS OR SHIMS AS REQUIRED TO SUPPORT AND PLUMB ALL STRUCTURAL STEEL MEMBERS. PROVIDE BEARING PLATES AND WALL ANCHORS OR ANCHOR BOLTS FOR ALL BEAMS RESTING ON CONCRETE AND ALL OTHER NECESSARY CONNECTING HARDWARE. SET ANCHOR BOLTS USING TEMPLATE. DO NOT FIELD CUT OR FIELD MODIFY ANY STRUCTURAL STEEL WITHOUT PRIOR WRITTEN APPROVAL BY ARCHITECT FOR EACH SPECIFIC CASE.

F8) PAINT — SHOP PRIME ALL STEEL NOT ENCASED IN CONCRETE OR TO BE FIREPROOFED. FOR ALL EXPOSED STEEL, USE A THREE COAT PAINT SYSTEM WITH A ZINC-RICH PRIMER, AN EPOXY INTERMEDIATE COAT, AND A PROTECTIVE TOP COAT, OR HOT-DIP GALVANIZE THE STEEL AFTER FABRICATION IS COMPLETE.

F9) FABRICATION — SHOP FABRICATE TO GREATEST EXTENT POSSIBLE BY WELDING INCLUDING BEAM STIFFENERS, COLUMN CAPS AND BASE PLATES, HOLES AND CONNECTIONS. SUBMIT COMPLETE SHOP DRAWINGS, FROM FIELD DIMENSIONS, FOR DESIGNER'S APPROVAL. DO NOT START FABRICATION OF STRUCTURAL STEEL MEMBERS UNTIL THE SHOP DRAWINGS HAVE BEEN REVIEWED AND APPROVED BY THE ENGINEER OF RECORD (EOR).

F10) STANDARD SPECIFICATIONS — COMPLY WITH THE LATEST RECOMMENDATIONS AND SPECIFICATIONS OF :
AISC SPECIFICATIONS FOR STRUCTURAL STEEL BUILDINGS, ALLOWABLE STRESS DESIGN AND PLASTIC DESIGN.
AISC LOAD AND RESISTANCE FACTOR DESIGN SPECIFICATION FOR STRUCTURAL STEEL BUILDINGS.
LOAD AND RESISTANCE FACTOR DESIGN SPECIFICATION FOR STEEL HOLLOW STRUCTURAL SECTIONS.
SPECIFICATION FOR STRUCTURAL JOINTS USING ASTM A325 OR A490 BOLTS.
AISC CODE OF STANDARD PRACTICE FOR STEEL BUILDINGS AND BRIDGES.
AWS D1.1 STRUCTURAL WELDING CODE – STEEL.

MINIMUM SPLICE and DEVELOPMENT LENGTH SCHEDULE

CLASS B TENSION SPLICE — Fy=60000 PSI

(UNLESS OTHERWISE SHOWN ON DRAWINGS)

f'c=4000 PSI			#3	#4	#5	#6	#7	#8	#9	#10	#11
	SPLICE LENGTH	TOP BARS	24"	32"	40"	48"	70"	80"	90"	102"	113"
		OTHER BARS	18"	25"	31"	37"	54"	62"	70"	78"	87"
	DEVELOPMENT LENGTH	TOP BARS	18"	25"	31"	37"	54"	62"	70"	78"	87"
		OTHER BARS	14"	19"	24"	28"	42"	47"	54"	60"	67"

1. AVOID SPLICES IN REGIONS OF MAXIMUM MOMENT. IF THIS IS NOT POSSIBLE STAGGER SPLICES SO THAT NOT MORE THAN 50% OF THE BARS ARE SPLICED WITHIN A REQUIRED SPLICE LENGTH OTHERWISE INCREASE SPLICE LENGTH BY 30%.
2. TOP BARS ARE DEFINED AS HORIZONTAL BARS WITH MORE THAN 12" OF CONCRETE CAST IN THE MEMBER BELOW THE REINFORCEMENT. WALL REINFORCING IS CLASSIFIED AS OTHER BARS.

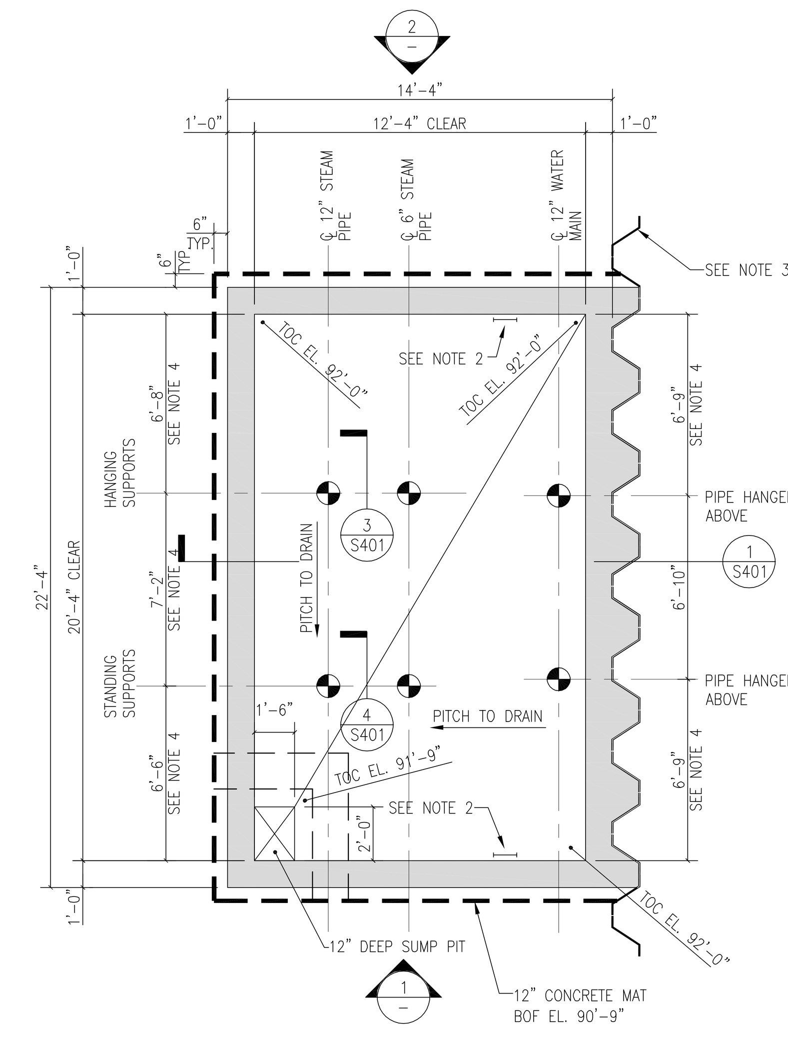

STEAM MANHOLE FOUNDATION PLAN

1/4" = 1'-0"

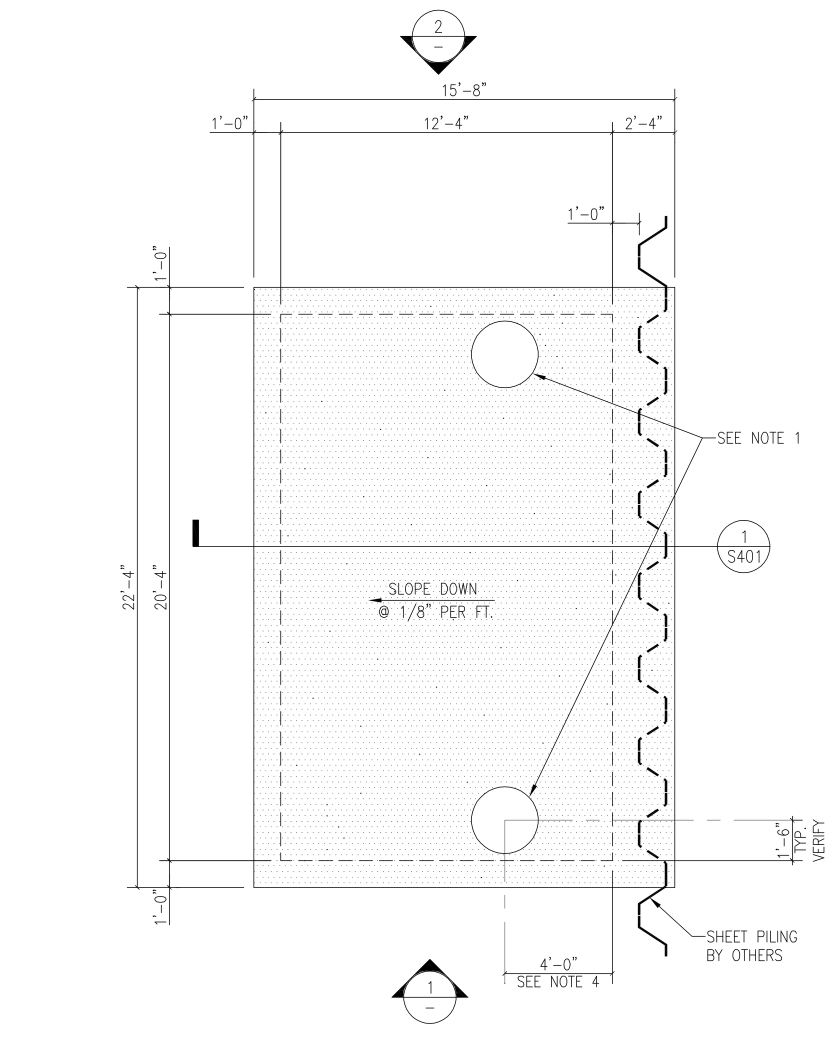

STEAM MANHOLE ROOF SLAB PLAN

1/4" = 1'-0"

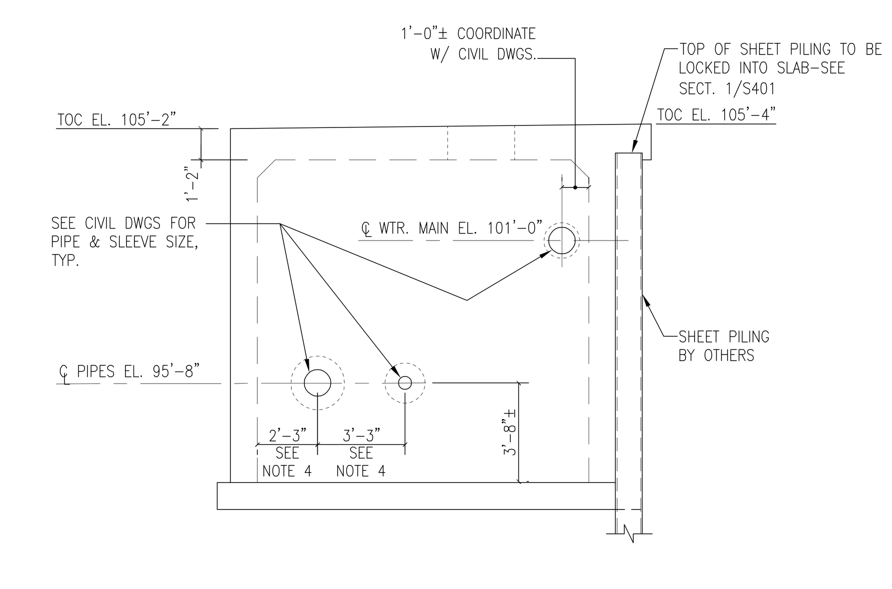

1 ELEVTION:

1/4" = 1'-0"

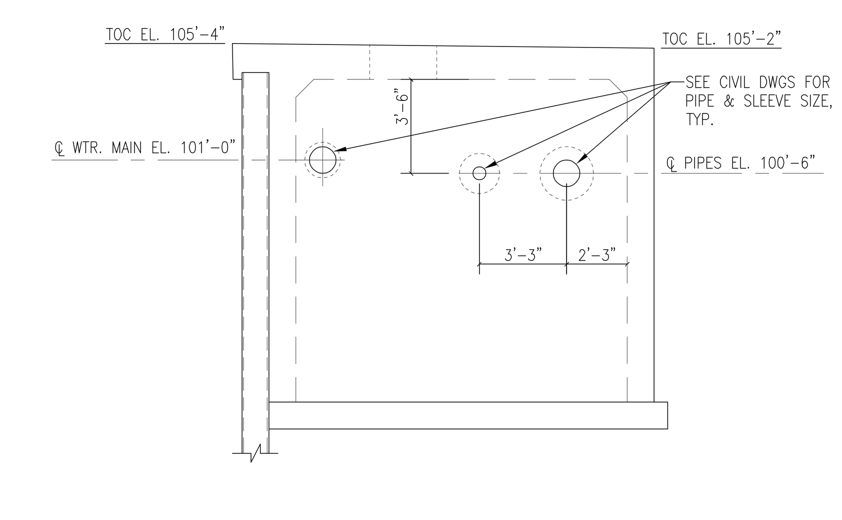

2 ELEVTION:

1/4" = 1'-0"

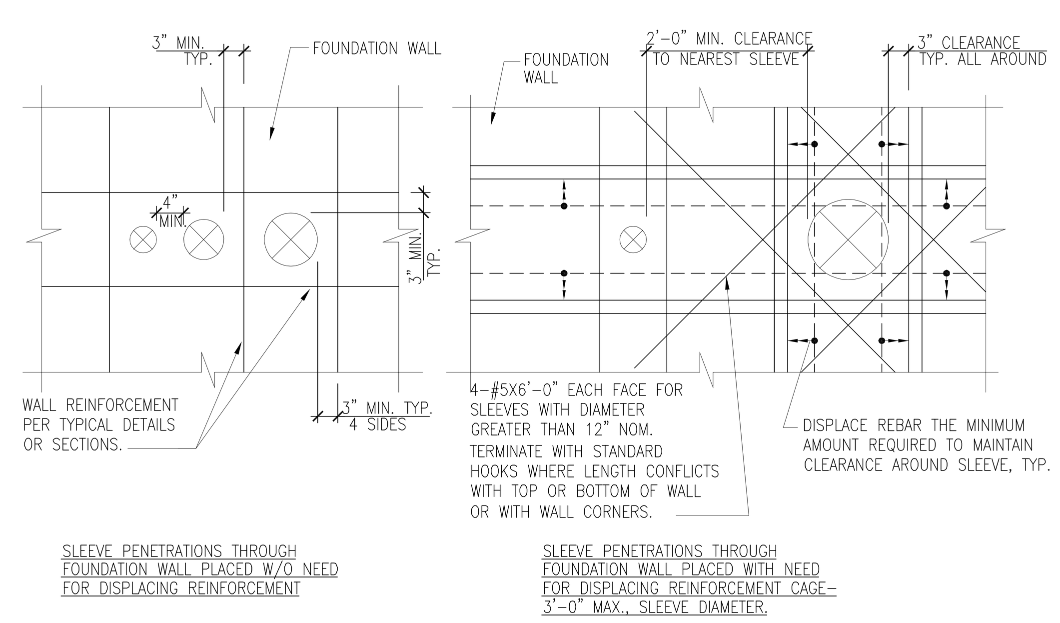

TC-1 TYPICAL REINFORCEMENT AROUND WALL PIPE SLEEVES

3/4" = 1'-0"

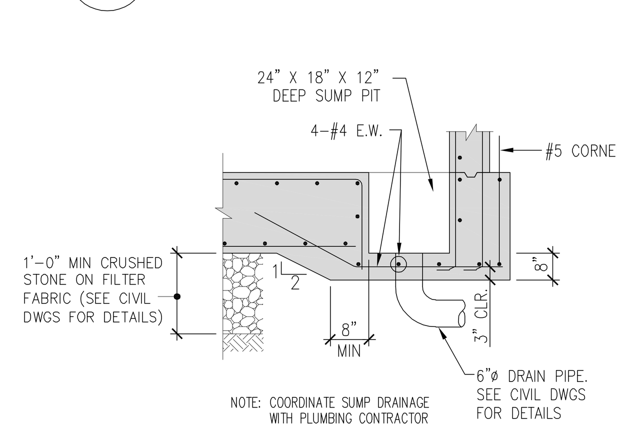

TC-2 TYPICAL SUMP PIT SECTION

N.T.S.

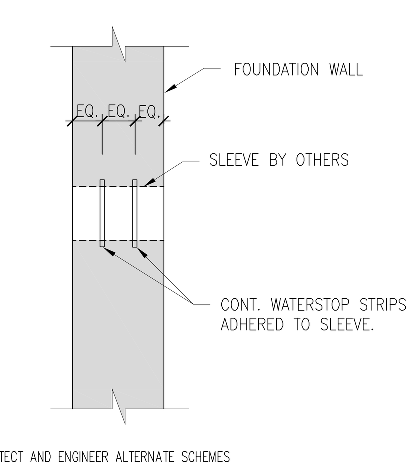

TC-3 PIPE SLEEVE DETAIL THROUGH CONCRETE WALL

3/4" = 1'-0"

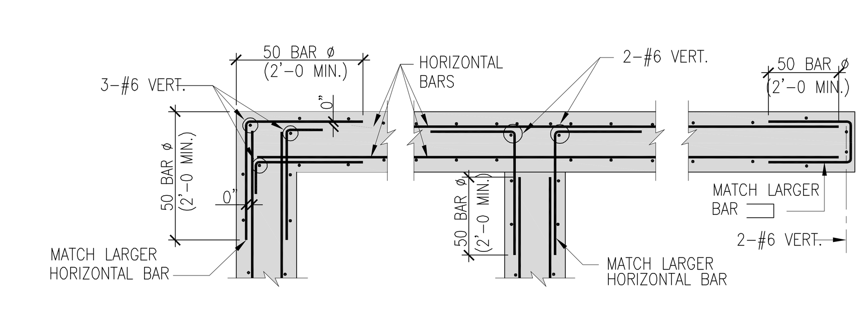

TC-4 TYPICAL CONCRETE WALL CORNER REINFORCEMENT

3/4" = 1'-0"

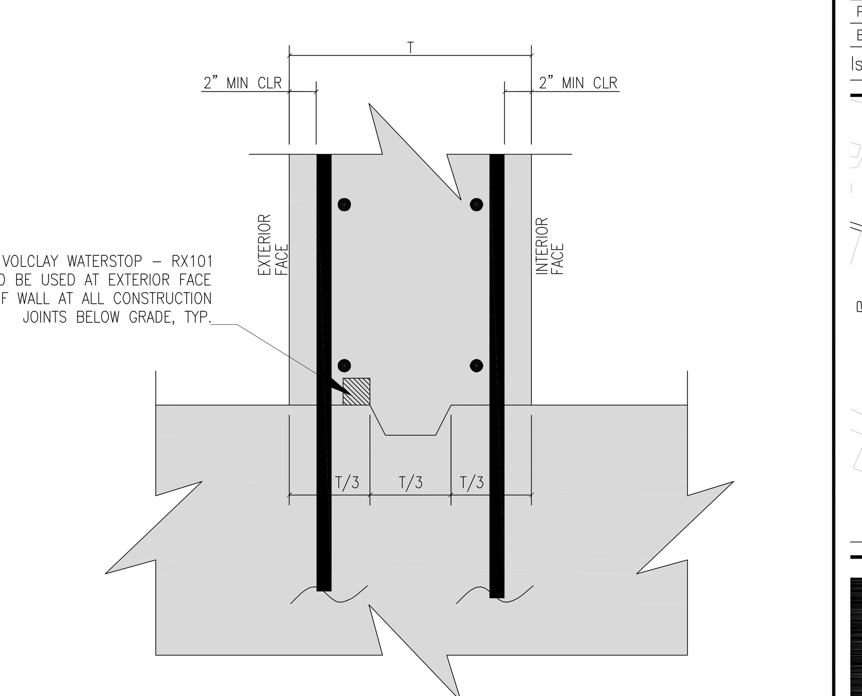

TC-5 SECTION: CONSTRUCTION JOINT BELOW GRADE

1 1/2" = 1'-0"

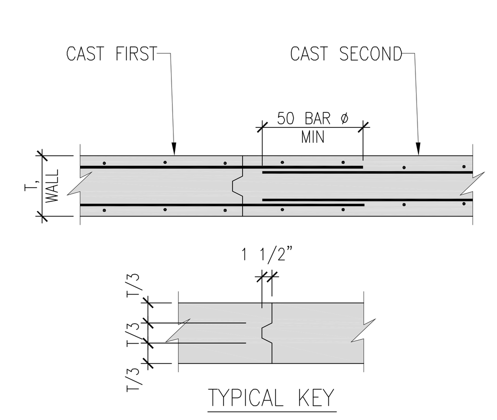

TC-6 CONSTRUCTION JOINT IN CONCRETE WALL

3/4"=1'-0"

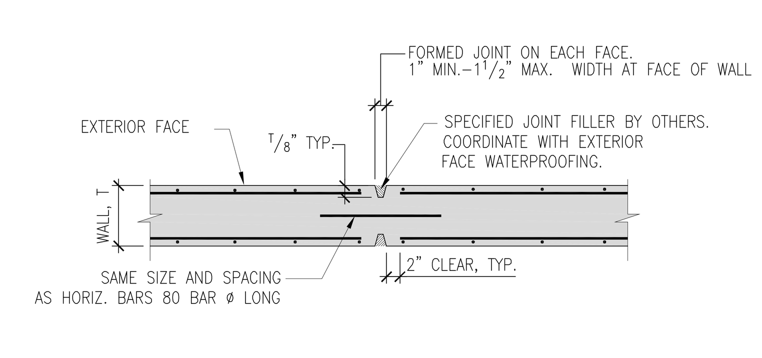

TC-7 CONTROL JOINT IN CONCRETE WALL MAXIMUM SPACING 40'-0"

3/4"=1'-0"

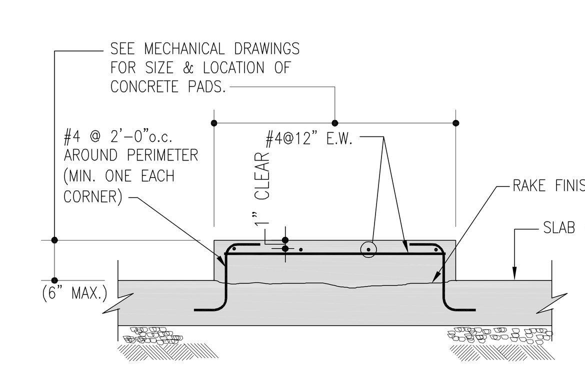

TC-8 TYPICAL CONCRETE PAD DETAIL AT SLAB ON GRADE

3/4"=1'-0"

General Notes:

1. PROVIDE 30"ø HEAVY-DUTY MANHOLE FRAME AND SELF SEALING SOLID LID BY NEENAH FOUNDRY COMPANY, OR APPROVED EQUAL. FRAME AND LID MUST BE CAPABLE OF SUPPORTING AASHTO HS20 ROADWAY LOADINGS.
2. CONTRACTOR SHALL PROVIDE GALVANIZED STEEL LADDER CONFORMING TO OSHA STANDARD "1920.27 FIXED LADDERS". LADDERS SHALL BE 24" WIDE WITH 12" MAXIMUM SPACING BETWEEN RUNGS. LADDER SHALL BE FASTENED TO CONCRETE WALL USING (2)-5/8"ø HILTI KWIK BOLT II EXPANSION ANCHORS WITH 4" MIN EMBEDMENT AT EACH CONNECTION POINT. CONTRACTOR SHALL SUBMIT PROPOSED LADDER AND INSTALLATION SCHEME FOR APPROVAL BY ENGINEER.
3. SHEET PILING BY OTHERS. SHEET PILING ALONG EDGE OF MANHOLE TO BE USED AS ONE-SIDED FORM AND SHALL BE LEFT IN PLACE PERMANENTLY.
4. CONTRACTOR SHALL COORDINATE ALL DIMENSIONS WITH MECHANICAL AND CIVIL DRAWINGS AND INCLUDE DIMENSIONS IN SHOP DRAWINGS FOR FINAL REVIEW AND APPROVAL PRIOR TO BEGINNING CONSTRUCTION.

SGH

Simpson Gumpertz & Heger Inc.

Consulting Engineers

www.sgh.com

Boston, MA	41 Seyon Street, Building 1, Suite 500 Waltham, MA 02453	Telephone: (781) 907 9000 Facsimile: (781) 907 9009
San Francisco, CA	The Landmark at One Market Suite 600 San Francisco, CA 94105	Telephone: (415) 495 3700 Facsimile: (415) 495 3550
Washington, DC	1355 Piccard Drive Suite 220 Rockville, MD 20850	Telephone: (301) 417 0999 Facsimile: (301) 417 9825

MARK	ISSUE DATE	DESCRIPTION
PERMIT	09/16/04	PERMIT SET
BID	08/31/04	BID SET

Issue Log

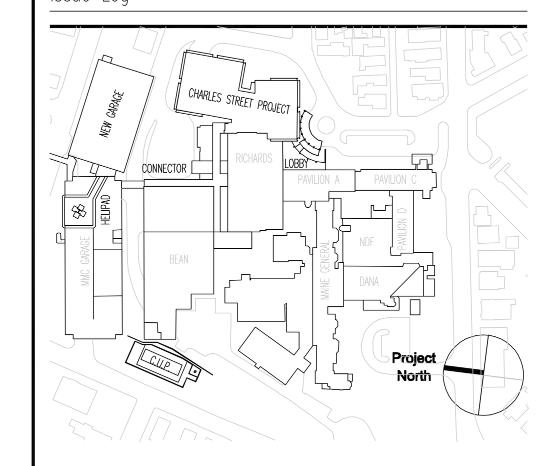

TRO

ARCHITECTURE PLANNING ENGINEERING INTERIOR DESIGN

The Ritchie Organization
80 Bridge Street
Newton, MA 02458-1134
617-969-9400

Maine Medical Center

Pkg C - Site Utitlities

Portland, Maine MMC Project No. 21846

Drawing Title

GENERAL NOTES
PLANS
ELEVATIONS

0' 4' 8' 16' 32'

Commission No.	4677	Date Issued	08/31/04
Scale	AS NOTED	Sheet Number	PKG-C
Drawn By	SWW		S201
Approved By	JHT/JJZ		
Filename	S201		

Copyright © 2004 The Ritchie Organization

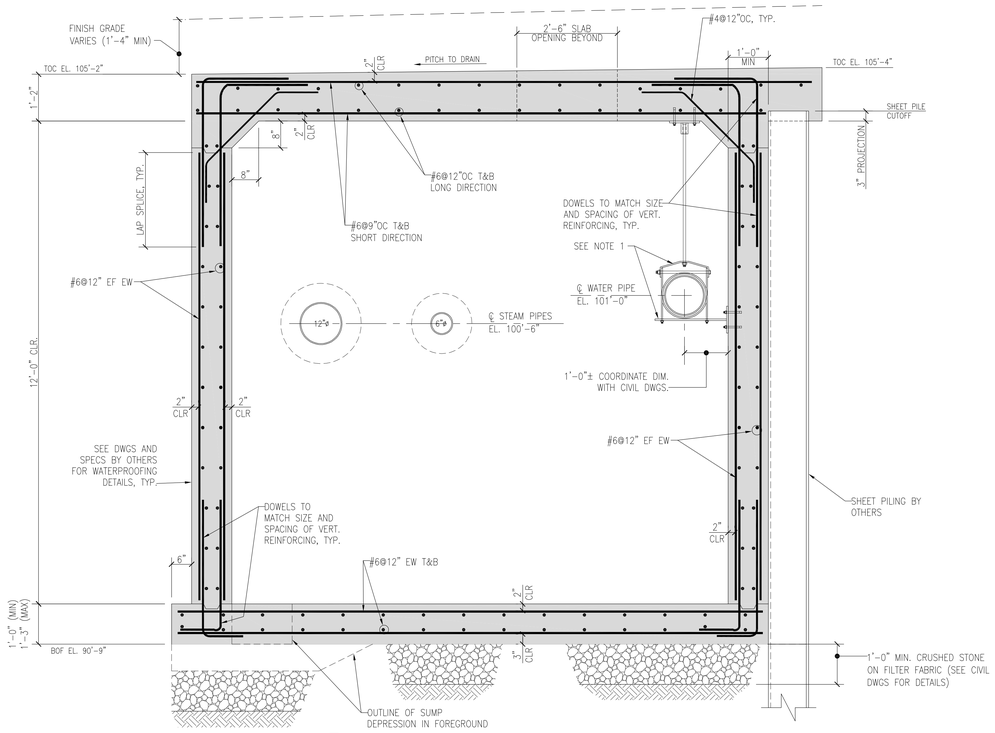

1 SECTION: STEAM MANHOLE
3/4" = 1'-0"

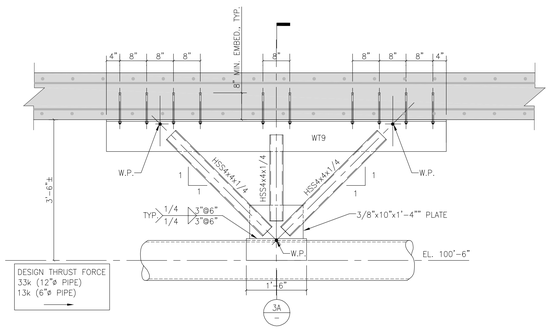

NOTE:
NUMBER OF HILTI UNDERCUT ANCHORS SHOWN (20 TOTAL) IS FOR 12"ø STEAM PIPE.
FOR 6"ø STEAM PIPE USE 4 ANCHORS AT END OF EACH HSS4x4 (12 TOTAL).

3 STEAM PIPE SUPPORT DETAIL
3/4"=1'-0"

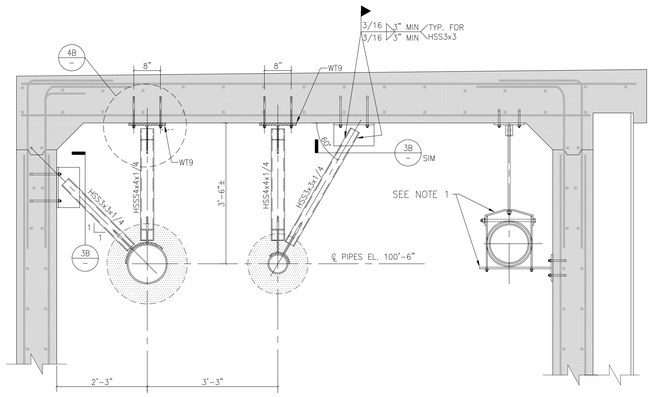

3A STEAM PIPE SUPPORT DETAIL
3/4"=1'-0"

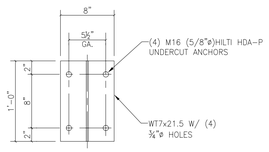

3B DETAIL: WT7 BRACE ANCHOR DETAIL
1 1/2"=1'-0"

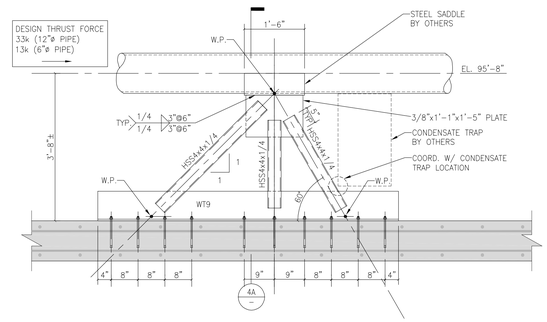

NOTE:
NUMBER OF HILTI UNDERCUT ANCHORS SHOWN (20 TOTAL) IS FOR 12"ø STEAM PIPE.
FOR 6"ø STEAM PIPE USE 4 ANCHORS AT END OF EACH HSS4x4 (12 TOTAL).

4 STEAM PIPE SUPPORT DETAIL
3/4"=1'-0"

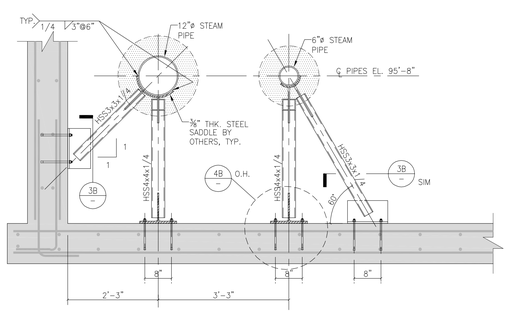

4A STEAM PIPE SUPPORT DETAIL
3/4"=1'-0"

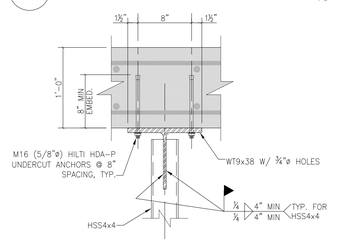

4B DETAIL: WT9 BRACE ANCHOR DETAIL
1 1/2"=1'-0"

General Notes:

1. PIPE HANGER ASSEMBLY AND SEISMIC BRACING TO BE DESIGNED AND DETAILED BY UTILITY CONTRACTOR. SUBMIT COMPLETE SHOP DRAWINGS FOR REVIEW AND APPROVAL PRIOR TO BEGINNING INSTALLATION.

SGH
www.sgh.com
Simpson Gumpertz & Heger Inc.
Consulting Engineers

Boston, MA — 41 Seyon Street, Building 1, Suite 500, Waltham, MA 02453 — Telephone: (781) 907 9000, Facsimile (781) 907 9009
San Francisco, CA — The Landmark at One Market Suite 600, San Francisco, CA 94105 — Telephone: (415) 495 3700, Facsimile (415) 495 3550
Washington, DC — 1355 Picard Drive Suite 220, Rockville, MD 20850 — Telephone: (301) 417 0999, Facsimile (301) 417 9825

MARK	ISSUE DATE	DESCRIPTION
PERMIT	09/16/04	PERMIT SET
BID	08/31/04	BID SET

Issue Log

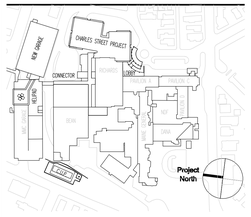

TRO
Architecture
Planning
Engineering
Interior Design
The Ritchie Organization
80 Bridge Street
Newton, MA 02458-1134
617-969-9400

Maine Medical Center
Pkg C - Site Utitlities
Portland, Maine — MMC Project No. 21846

Drawing Title

SECTIONS AND DETAILS

0' 4' 8' 16' 32"

Commission No.	4677	Date Issued	08/31/04
Scale	AS NOTED	Sheet Number	PKG-C
Drawn By	SWW		
Approved By	JHT/JJZ		
Filename	S401		

S401

Copyright © 2004 The Ritchie Organization