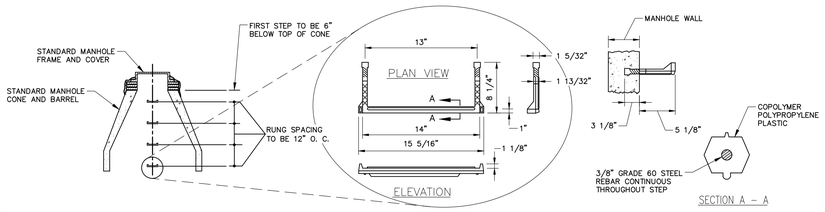

PLASTIC MANHOLE STEPS

N.T.S.

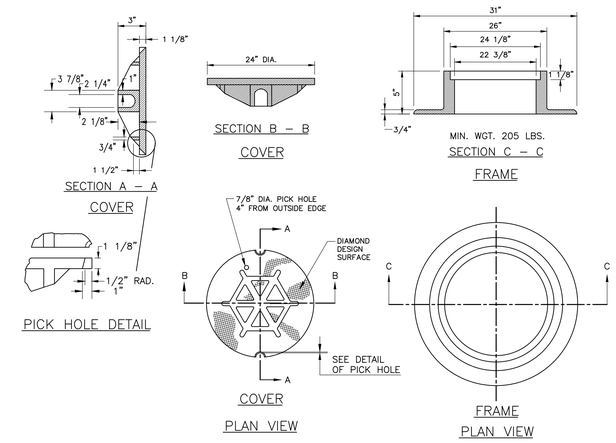

NOTE:

FOR ALL CROSS COUNTRY MANHOLES (LAWN AREAS), USE PAM REXUS MANHOLE COVERS BY CERTAINTEED.

TYPE "A" CAST IRON MANHOLE COVER AND FRAME

N.T.S.

GENERAL NOTES FOR MANHOLES AND CATCH BASINS

1. ALL CONCRETE SHALL BE CLASS "A" AND HAVE A MINIMUM ULTIMATE COMPRESSIVE STRENGTH OF 4000 LBS. PER SQ. INCH AT THE END OF 28 DAYS, UNLESS OTHERWISE NOTED.
2. PRECAST REINFORCED CONE BARREL MANUFACTURED PER ASTM SPEC. C–478.
3. ALL MANHOLES SHALL HAVE A BITUMINOUS WATERPROOFING APPLIED TO THE EXTERIOR SURFACE. IF CONSTRUCTED OF BRICK MASONRY, SURFACE SHALL BE PLASTERED WITH A SMOOTH MORTAR FINISH 3/8" THICK. AFTER THE MORTAR HAS SET, THE SURFACE SHALL BE WATERPROOFED AS REQUIRED BY SUPPLEMENTAL SPECIFICATIONS SECTION 604.
4. CASTINGS SHALL CONFORM TO ASTM DESIGNATION A48–CLASS 35. ALL PARTS OF CASTINGS, EXCEPT FINISHED SURFACE, SHALL RECEIVE A COAT OF COAL TAR PITCH VARNISH OR ASPHALTUM PAINT WHICH SHALL BE SMOOTH AND TOUGH BUT NOT BRITTLE.
5. MANHOLES MAY BE CONSTRUCTED OF MASONRY, PRECAST REINFORCED CONCRETE, OR CAST IN PLACE.
6. CONTRACTOR SHALL SUBMIT ANTIFLOATATION CALCULATIONS FOR ALL MANHOLE AND CATCH BASIN STRUCTURES.
7. ALL PRECAST MANHOLES AND CATCH BASINS SHALL BE IDENTIFIED BY STATION, OFFSET, AND STRUCTURE ID PAINTED ON THE SIDE OF THE STRUCTURE BY THE MANUFACTURER.
8. STORM AND SEWER MANHOLES SHALL HAVE SOLID COVERS WITH ONE DRILLED PICK HOLE.
9. EXISTING MANHOLES, CATCH BASINS, FRAMES, AND COVERS SHALL BE SALVAGED BY THE CONTRACTOR, AND SHALL REMAIN THE PROPERTY OF THE CITY OF PORTLAND.
10. WHEN THE FLOW CHANGES DIRECTION IN A MANHOLE, THE CHANNEL ALIGNMENT SHALL FOLLOW A SMOOTH RADIUS. CHANNELS SHALL BE FORMED TO ACCEPT ALL INLET PIPES.
11. ON STORM AND SEWER MANHOLES, THE SHELF AND CHANNEL SHALL BE FORMED BY BRICK SET IN CEMENT MORTAR OR BY FACTORY PRE–CAST CONCRETE. SUCH PRE–CAST CONCRETE SHALL BE EPOXY COATED AND THE SHELF SHALL HAVE A PERMANENT NON–SKID SURFACE.

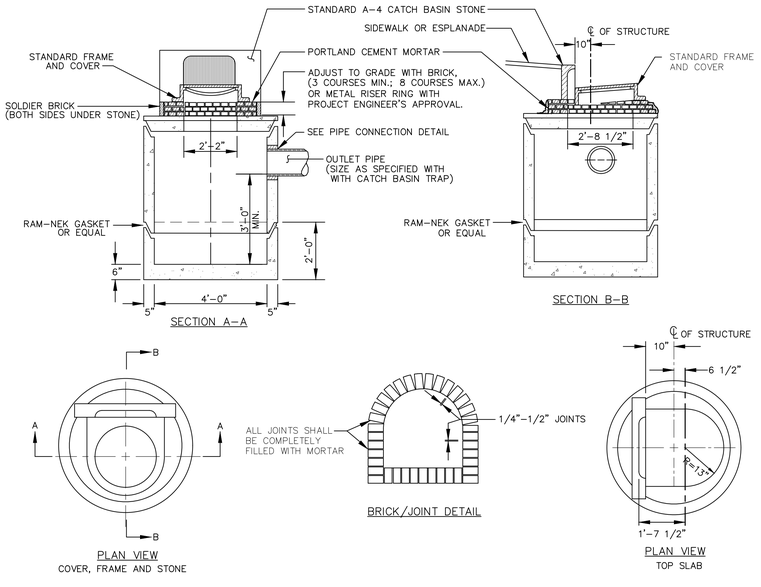

PRECAST CONCRETE CATCH BASIN – TYPE "D"

N.T.S.

NOTE:

ALL MANHOLE COVERS SHALL BE SOLID AND SHALL HAVE ONE 7/8" DIAMETER DRILLED PICK HOLE, LOCATED 8" FROM THE CENTER OF THE COVER.

ALL SANITARY MANHOLE COVERS SHALL HAVE "SEWER" CAST INTO THE COVER. ALL STORMWATER/DRAIN MANHOLE COVERS SHALL HAVE "DRAIN" CAST INTO THE COVER.

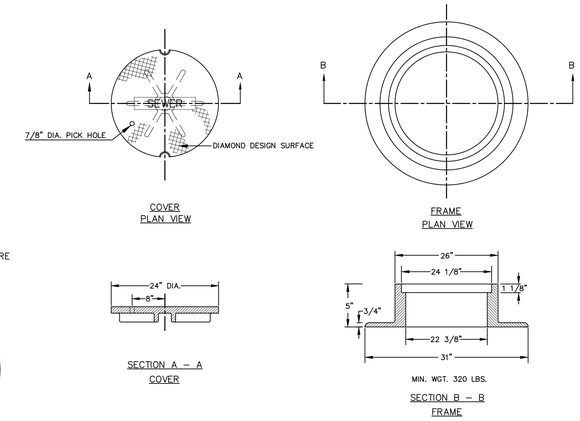

CAST IRON MANHOLE COVER AND FRAME

N.T.S.

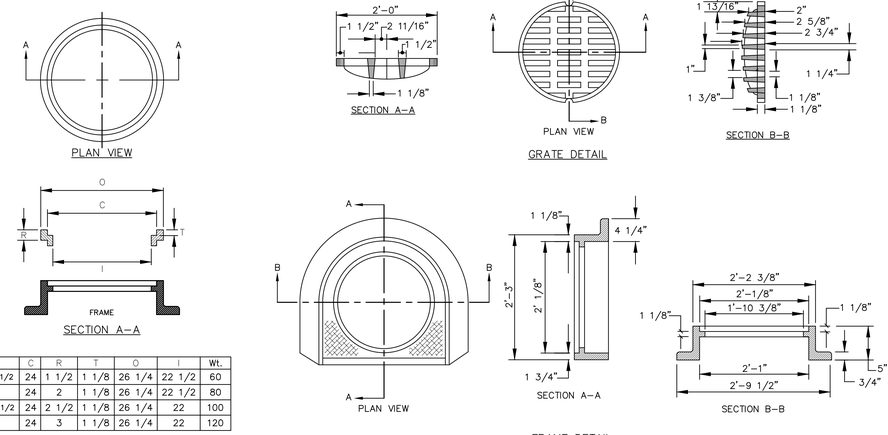

SIZE	C	R	T	O	I	Wt.
R241 1/2	24	1 1/2	1 1/8	26 1/4	22 1/2	60
R242	24	2	1 1/8	26 1/4	22 1/2	80
R242 1/2	24	2 1/2	1 1/8	26 1/4	22	100
R243	24	3	1 1/8	26 1/4	22	120

MANHOLE RISER RING

N.T.S.

CATCH BASIN FRAME & GRATE

N.T.S.

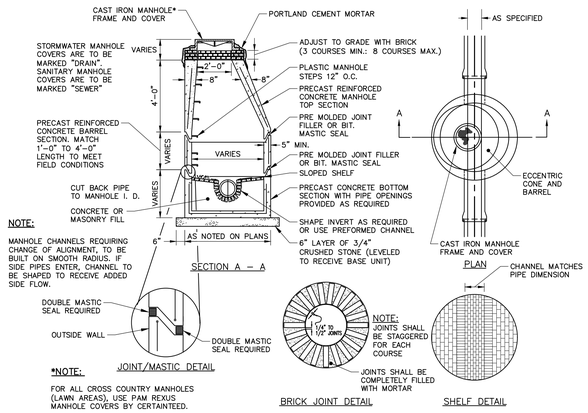

NOTE:

MANHOLE CHANNELS REQUIRING CHANGE OF ALIGNMENT, TO BE BUILT ON SMOOTH RADIUS. IF SIDE PIPES ENTER, CHANNEL TO BE SHAPED TO RECEIVE ADDED SIDE FLOW.

*NOTE:

FOR ALL CROSS COUNTRY MANHOLES (LAWN AREAS), USE PAM REXUS MANHOLE COVERS BY CERTAINTEED.

PRECAST CONCRETE MANHOLE

N.T.S.

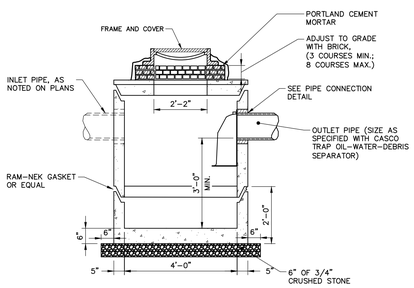

PRECAST CONCRETE CATCH BASIN

N.T.S.

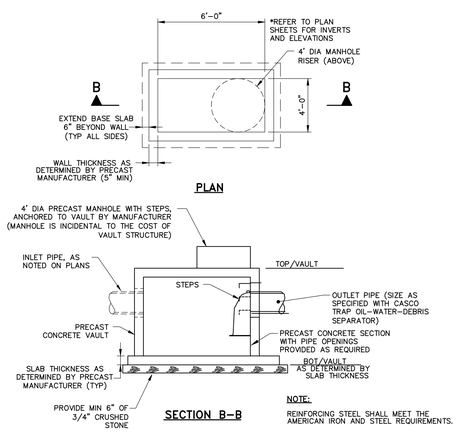

NOTE:

REINFORCING STEEL SHALL MEET THE AMERICAN IRON AND STEEL REQUIREMENTS.

PRECAST CONCRETE VAULT

N.T.S.

LEVEL III SITE PLAN APPLICATION-NOT FOR CONSTRUCTION

41 Hutchins Drive
Portland, Maine 04102
800.426.4262 | www.woodardcurran.com
COMMITMENT & INTEGRITY DRIVE RESULTS
WOODARD & CURRAN

THIS DOCUMENT IS THE PROPERTY OF WOODARD & CURRAN INC. AND ITS CLIENT. REPRODUCTION OR MODIFICATION WITHOUT WRITTEN PERMISSION IS PROHIBITED.

STATE OF MAINE
DAVID A. SENUS
11579
PROFESSIONAL ENGINEER
10/22/2018

REV	DESCRIPTION	DATE

DESIGNED BY: CMS | DRAWN BY: BGM | CHECKED BY: DAS | 031108.C00.dwg

REV	DESCRIPTION	DATE

CIVIL DETAILS - 2

MAINE MEDICAL CENTER
22 BRAMHALL STREET
PORTLAND, ME 04102

MMC ST. JOHN STREET
EMPLOYEE PARKING GARAGE

JOB NO.: 0231158.00
DATE: JUNE 22, 2018
SCALE: AS NOTED
SHEET: 13 OF 17

C-201

42x30 SHEET
1:1
G:\Users\bmcdevitt\appdata\local\temp\AcPublish_26600\0231158 C200X.dwg, Jun 22, 2018 - 8:14am