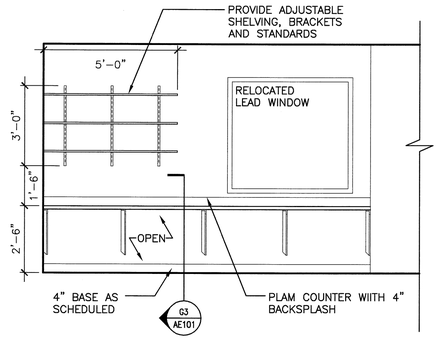

K3 ELEVATIONS

3/8"=1'-0"

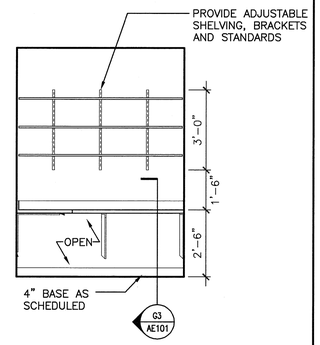

K6 ELEVATIONS

3/8"=1'-0"

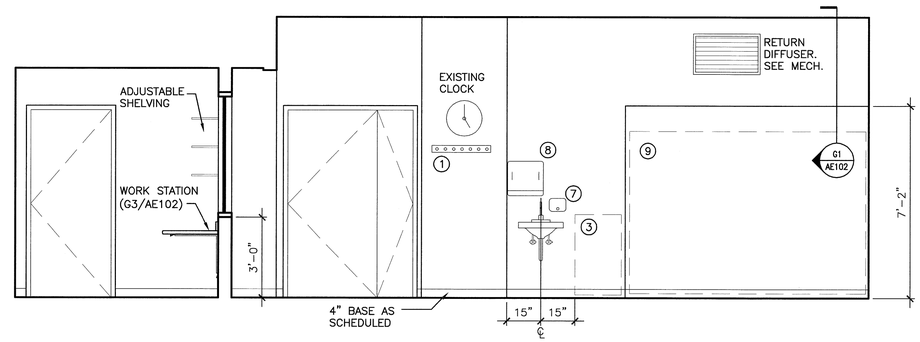

J9 ELEVATIONS

3/8"=1'-0"

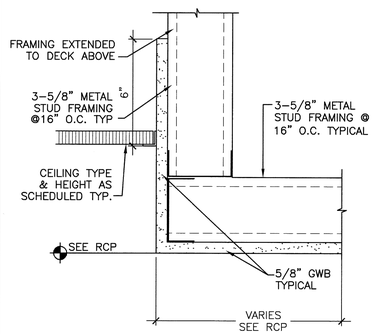

G1 SOFFIT DETAIL

3"=1'-0"

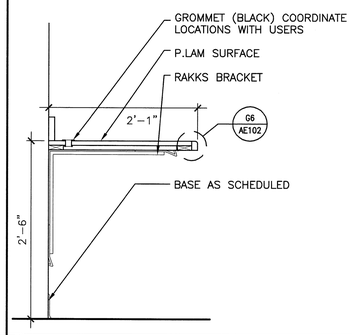

G3 CASEWORK DETAIL

1"=1'-0"

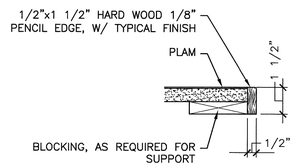

G6 NOSING DETAIL

1"=1'-0"

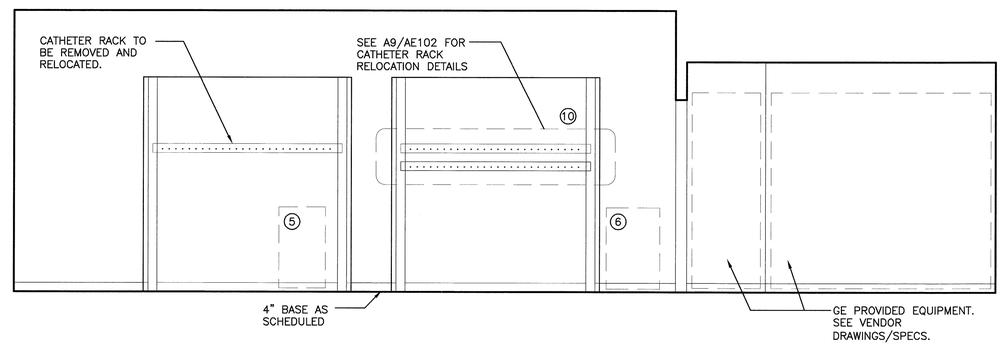

E9 ELEVATIONS

3/8"=1'-0"

EQUIPMENT SCHEDULE

TAG	DESCRIPTION	STATUS
1	APRON RACK	O/C
2	WHITE BOARD	O/C
3	CART	O/C
4	PHYSIO MONITORING	O/O
5	PYXIS	O/O
6	CONTRAST WARMER	O/O
7	SOAP DISP	O/C
8	PAPER TOWEL DISP.	O/C
9	EXIST. CASEWORK (RELOCATED) SEE DEMO 9	O/C
10	EXIST CATHETER RACK (RELOCATED) SEE DEMO 10	O/C

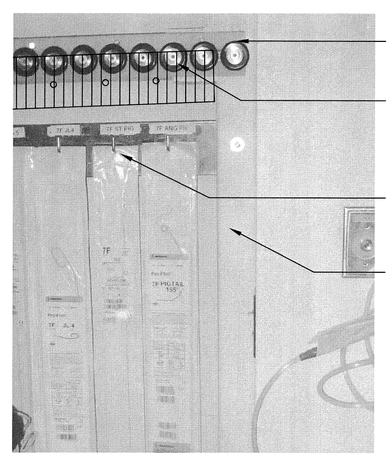

A9 CATHETER RACK RELOCATION DIAGRAM

NTS

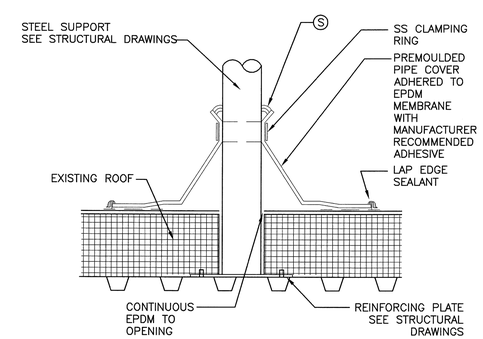

A12 PIPING PENETRATION

1-1/2"=1'-0"

144 Fore Street/P.O. Box 618
Portland, Maine 04104
tel. (207) 772-3846
fax. (207) 772-1070
www.smrtinc.com

ARCHITECTURE
ENGINEERING
PLANNING
INTERIOR DESIGN
COMMISSIONING

SMRT

PROJECT NORTH

LICENSED ARCHITECT
KRISTEN L. DAMUTH
No. 2785
STATE OF MAINE
20 Mar 09

Maine Medical Center
Cath Lab #2 Reno
PORTLAND, ME

ISSUED FOR CONSTRUCTION
3-30-09

CURRENT ISSUE STATUS:

REV	DESCRIPTION	DATE

GRAPHIC SCALE: 0" 1"

SCALE:	AS DRAWN
PROJECT MANAGER:	KD
JC/DRAWN BY:	ART
A/E OF RECORD:	KD
CAD FILE:	AE102-08006
PROJECT NO:	09009
DATE:	

SHEET TITLE:
INTERIOR ELEVATIONS AND DETAILS

SHEET No.
AE-102

© COPYRIGHT 2008 SMRT INC.