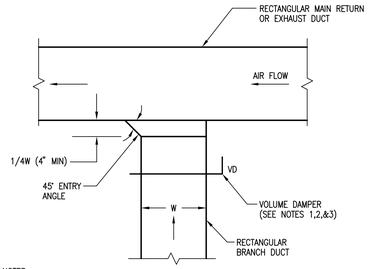

NOTES:
1. UP TO 1.5 SQ. FT. CROSS SECTIONAL AREA AND NOT EXCEEDING 24" IN WIDTH, USE SINGLE BLADE VOLUME DAMPER.
2. FOR CROSS SECTIONAL AREAS FROM 1.5 TO 3.0 SQ. FT. AND NOT EXCEEDING 24" IN WIDTH, USE 3 SINGLE BLADE VOLUME DAMPERS INDIVIDUALLY OPERATED TO FUNCTION IN AN OPPOSED MANNER.
3. FOR CROSS SECTIONAL AREAS GREATER THAN 3.0 SQ. FT. AND/OR EXCEEDING 24" IN WIDTH, USE GANG OPERATED OPPOSED BLADE VOLUME DAMPER AND FRAME ASSEMBLY.

1 TYPICAL LOW PRESSURE RECTANGULAR RETURN/EXHAUST DUCT TAKE-OFF DETAIL
SCALE: NTS

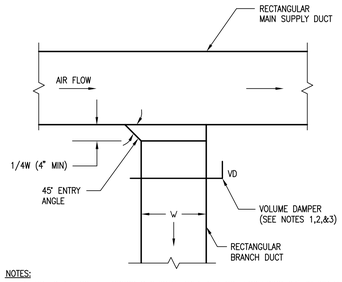

NOTES:
1. UP TO 1.5 SQ. FT. CROSS SECTIONAL AREA AND NOT EXCEEDING 24" IN WIDTH, USE SINGLE BLADE VOLUME DAMPER.
2. FOR CROSS SECTIONAL AREAS FROM 1.5 TO 3.0 SQ. FT. AND NOT EXCEEDING 24" IN WIDTH, USE 3 SINGLE BLADE VOLUME DAMPERS INDIVIDUALLY OPERATED TO FUNCTION IN AN OPPOSED MANNER.
3. FOR CROSS SECTIONAL AREAS GREATER THAN 3.0 SQ. FT. AND/OR EXCEEDING 24" IN WIDTH, USE GANG OPERATED OPPOSED BLADE VOLUME DAMPER AND FRAME ASSEMBLY.

2 TYPICAL LOW PRESSURE RECTANGULAR SUPPLY DUCT TAKE-OFF DETAIL
SCALE: NTS

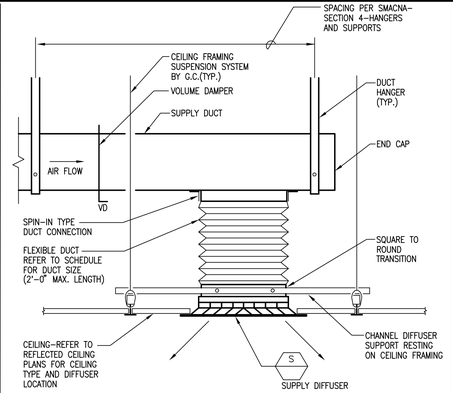

3 TYPICAL SUPPLY DIFFUSER DETAIL WITH FLEXIBLE DUCT CONNECTION
SCALE: NTS

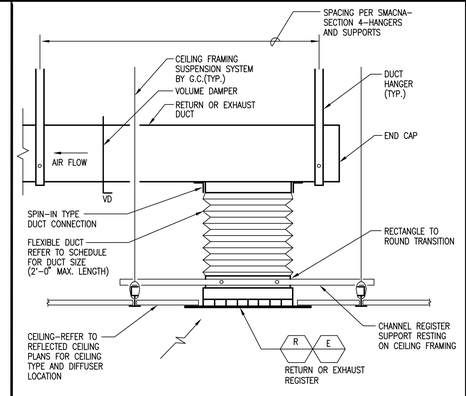

4 TYPICAL EXHAUST/RETURN REGISTER DETAIL WITH FLEXIBLE DUCT CONNECTION
SCALE: NTS

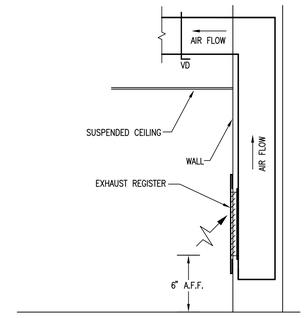

5 TYPICAL SIDEWALL RETURN/EXHAUST REGISTER DETAIL
SCALE: NTS

General Notes:

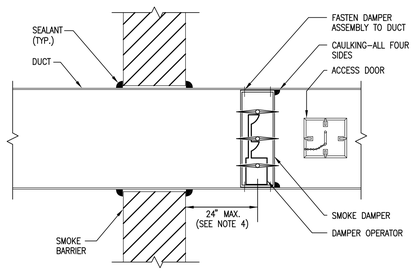

NOTES:
1. INSTALL ACCESS DOOR IN DUCT FOR DAMPER ACCESS. IF THE DAMPER ACTUATOR IS LOCATED WITHIN THE DUCT, AN ADDITIONAL ACCESS DOOR MUST BE PROVIDED.
2. INSTALL IN ACCORDANCE WITH MANUFACTURERS RECOMMENDATIONS AND NFPA-90A.
3. REFER TO SMACNA-"FIRE, SMOKE AND RADIATION DAMPER INSTALLATION GUIDE FOR HVAC SYSTEMS" FOR FIRE DAMPER INSTALLATION DETAILS.
4. WHERE POSSIBLE, LOCATE THE DAMPER IN THE SMOKE BARRIER AT THE POINT WHERE THE DUCT PASSES THROUGH THE SMOKE BARRIER. IN NO CASE SHALL THE DAMPER BE INSTALLED MORE THAN 24" FROM THE SMOKE BARRIER OR AFTER THE FIRST SUPPLY, RETURN, OR EXHAUST REGISTER, OR DUCT TAKE-OFF.

6 SMOKE DAMPER AT SMOKE BARRIER INSTALLATION DETAIL
SCALE: NTS

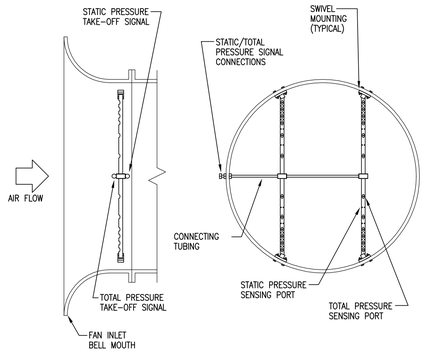

NOTES:
1. INSTALL IN ACCORDANCE WITH MANUFACTURERS RECOMMENDATIONS AND NFPA-90A.

7 FAN INLET AIR FLOW STATION INSTALLATION DETAIL
SCALE: NTS

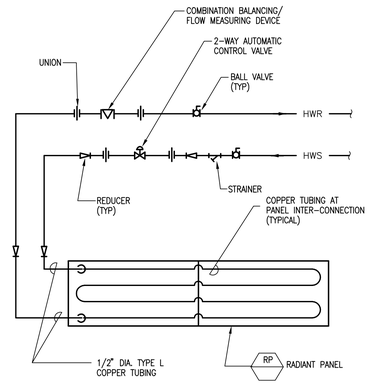

8 RADIANT PANEL PIPING CONNECTION DETAIL
SCALE: NTS

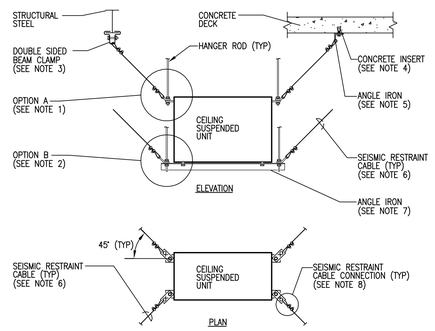

NOTE:
1. OPTION A APPLIES TO EQUIPMENT HAVING TOP OR SIDE ATTACHMENT.
2. OPTION B APPLIES TO EQUIPMENT SUPPORTED FROM THE BOTTOM OF THE EQUIPMENT.
3. USE DOUBLE SIDED BEAM CLAMPS FOR ATTACHMENT TO STRUCTURAL STEEL OR JOISTS.
4. USE CONCRETE INSERTS FOR ATTACHMENT TO CONCRETE DECK TYPE CONSTRUCTION.
5. ANGLE IRON SHALL BE 2-1/2"x5"x1/4" ANGLE 2" WIDE WITH (2) 9/16" HOLES FOR FASTENING TO CONCRETE DECK.
6. SIZE CABLE BASED ON SEISMIC HAZARD LEVEL SPECIFIED. PROVIDE CABLE WITH 1/2" OF SLACK WHERE CABLES ARE USED WITH VIBRATION ISOLATED EQUIPMENT.
7. PROVIDE 2 ANGLES FOR BOTTOM SUPPORT OF UNIT (OPTION B). PROVIDE (4) 2"x 2"x 2"x1/4" ANGLES WELDED TO BOTTOM SUPPORT ANGLES AND TO UNIT. (THIS IS NOT REQUIRED WHERE UNIT IS PROVIDED WITH BOTTOM MOUNTING HOLES).
8. REFER TO SMACNA-"SEISMIC RESTRAINT MANUAL GUIDELINES FOR MECHANICAL SYSTEMS" FOR CABLE CONNECTION DETAIL.

9 TYPICAL SEISMIC BRACING FOR CEILING MOUNTED EQUIPMENT DETAIL
SCALE: NTS

MARK	ISSUE DATE	DESCRIPTION
BID	12/14/07	BID SET

Issue Log

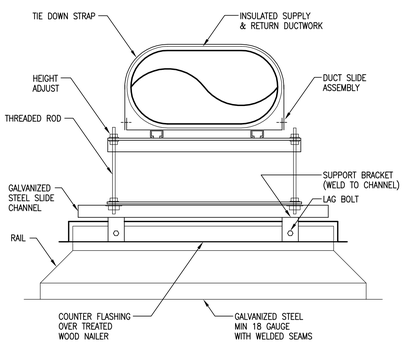

NOTES:
1. ALL EXPOSED METAL TO BE PRIMED & PAINTED

10 ROOF MOUNTED DUCT SUPPORT DETAIL
SCALE: NTS

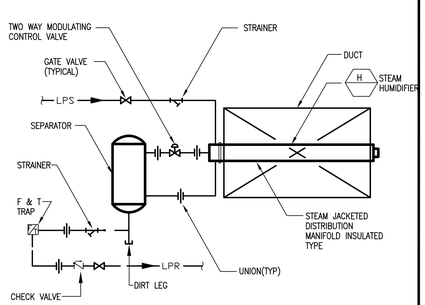

11 DUCT MOUNTED STEAM HUMIDIFIER
SCALE: NTS

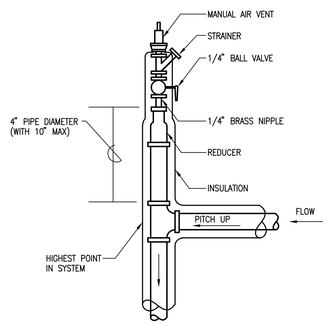

12 MANUAL AIR VENT DETAIL
SCALE: NTS

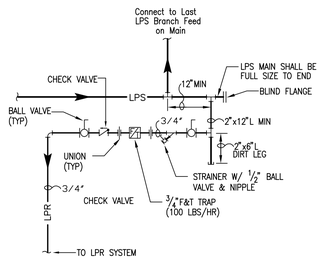

13 LOW PRESSURE END OF MAIN DRIP STEAM TRAP ASSEMBLY DETAIL
SCALE: NTS

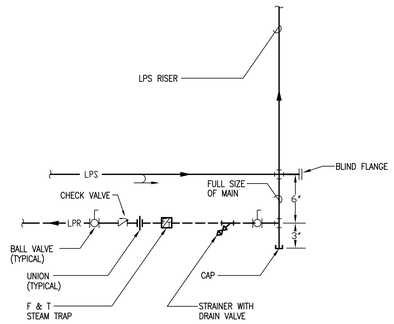

NOTES:
1. LOCATE TRAP, VALVES, AND DIRT LEG IN AN ACCESSIBLE LOCATION

14 LOW PRESSURE STEAM RISER DRIP DETAIL
SCALE: NTS

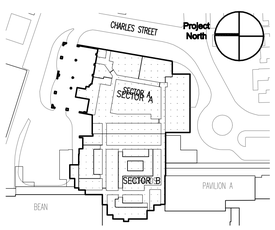

Key Plan

TRO Jung|Brannen

ARCHITECTURE INTERIOR DESIGN ENGINEERING MASTER PLANNING

22 Boston Wharf Road, Boston, Massachusetts 02210
Tel 617.502.9400 Fax 617.502.3402 www.trojungbrannen.com

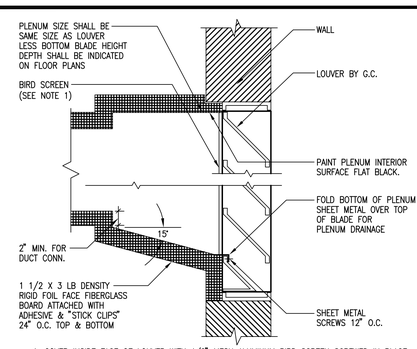

NOTES:
1. COVER INSIDE FACE OF LOUVER WITH 1/2" MESH ALUMINUM BIRD SCREEN SCREWED IN PLACE.
2. INSULATE UNUSED PORTION OF LOUVER WITH 1 1/2" GLASS FIBER INSULATING BOARD.
3. SEAL ALL PLENUM SEAMS WATERTIGHT WITH SILICONE SEALANT.
4. TYPICAL FOR SUPPLY PLENUMS.
5. PROVIDE ACCESS DOOR IN PLENUM. DOOR SHALL BE FIELD COORDINATED FOR ACCESS. DOOR SIZE SHALL BE 36" HIGH x 18" WIDE. REFER TO SPEC FOR DOOR CONSTRUCTION.

15 INTAKE LOUVER INSTALLATION DETAIL
SCALE: NTS

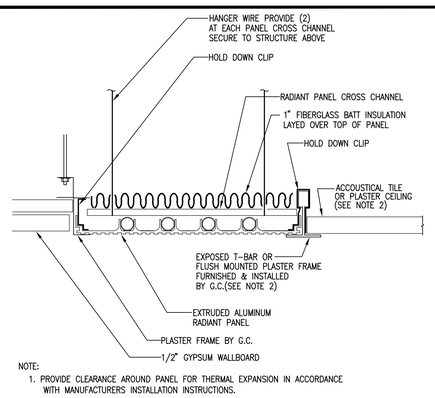

NOTE:
1. PROVIDE CLEARANCE AROUND PANEL FOR THERMAL EXPANSION IN ACCORDANCE WITH MANUFACTURERS INSTALLATION INSTRUCTIONS.
2. REFER TO ARCHITECTURAL REFLECTED CEILNG PLANS FOR CEILING TYPE.

16 RADIANT PANEL INSTALLATION DETAIL
SCALE: NTS

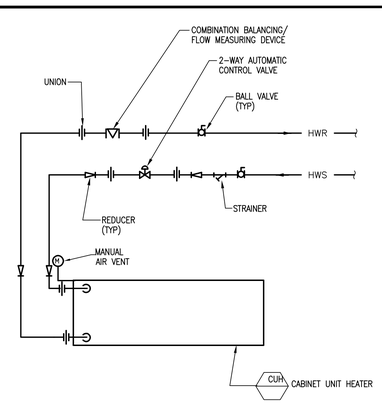

17 CABINET UNIT PIPING CONNECTION DETAIL
SCALE: NTS

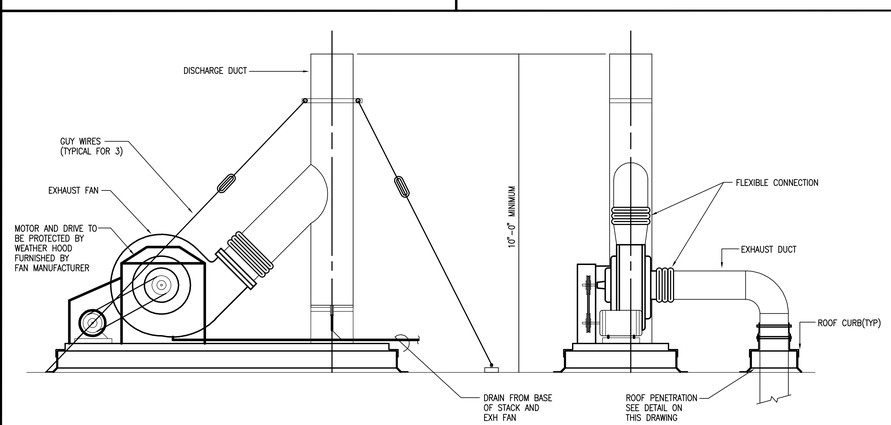

18 ROOF EXHAUST FAN INSTALLATION DETAIL
SCALE: NTS

Maine Medical Center
ED Expansion and Renovation
Portland, Maine MMC Project No. 21843

Drawing Title
HVAC TYPICAL DETAILS SHEET NO. 2

Drawn By	FWC	Commission No.	4696
Approved By	MJC	Date Issued	12/14/07

Phase / Package Number	Sheet Number
	H602

Copyright © 2007 TRO Jung|Brannen