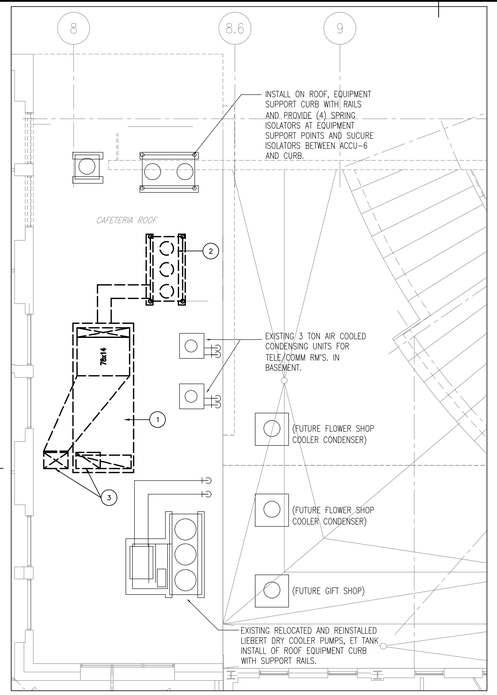

CAFETERIA ROOF PART PLAN DEMOLITION

SCALE:1/8"=1'-0"

1. REMOVE THE EXISTING ROOFTOP AIR HANDLING UNIT ENTIRELY; INCLUDING ALL CONTROLS PIPING DUCTWORK AND ASSOCIATED APPURTENANCES.
2. CAREFULLY REMOVE THE EXISTING RTU UNIT AIR COOLED CONDENSING UNIT ENTIRELY; INCLUDING ALL CONTROLS, PIPING AND ASSOCIATED APPURTENANCES. RETURN CONDENSING UNIT TO OWNER AT OWNER'S DISCRETION.
3. REMOVE EXISTING SUPPLY AND RETURN DUCTWORK ABOVE ROOF AND CUT AND CAP DUCTWORK AT ROOF LINE AND SEAL WATER TIGHT.

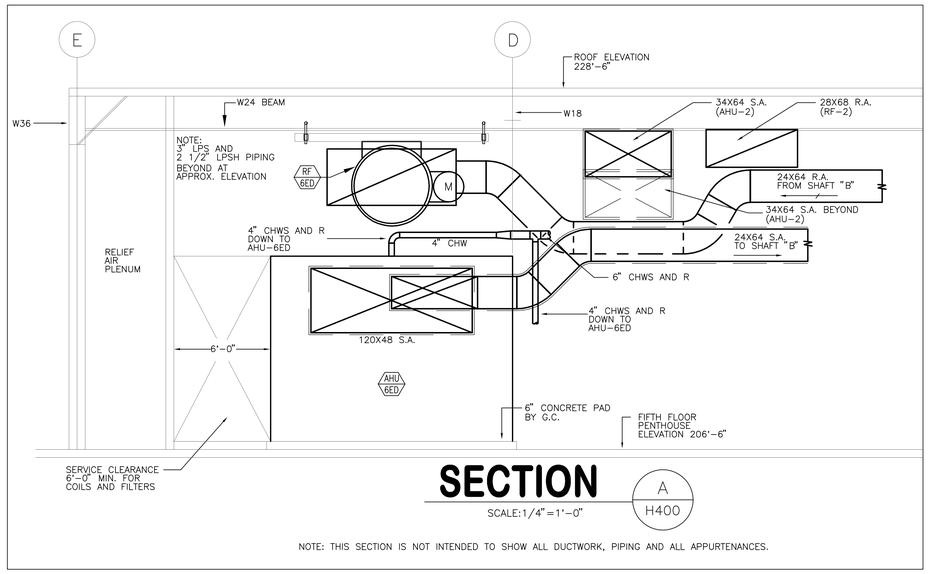

SECTION A H400

SCALE:1/4"=1'-0"

NOTE: THIS SECTION IS NOT INTENDED TO SHOW ALL DUCTWORK, PIPING AND ALL APPURTENANCES.

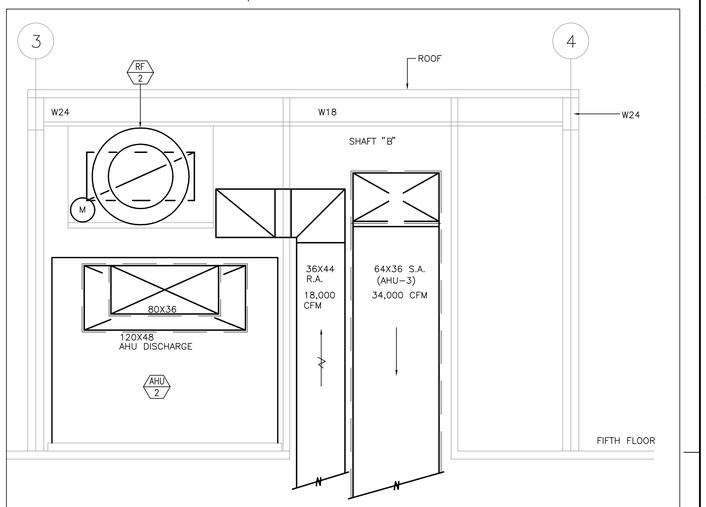

SECTION B H400

SCALE:1/4"=1'-0"

NOTE: THIS SECTION IS NOT INTENDED TO SHOW ALL DUCTWORK, PIPING AND ALL APPURTENANCES.

General Notes: DRAWING NOTES:

1. PROVIDE ELEVATED GALVANIZED STEEL PLATFORM FOR SUPPORT OF EXHAUST FAN ABOVE ROOF. PROVIDE PLATFORM WITH SUPPORT FRAME AND ROOF CURB TO ATTACH SECURELY INTO ROOF STRUCTURAL STEEL. INSTALL EXHAUST FAN ON PLATFORM AND SECURELY ATTACH BETWEEN PLATFORM AND FAN WITH VIBRATION ISOLATION SPRINGS/SEISMIC RESTRAINT TYPE HARDWARE.
2. 48X22 EXHAUST DUCT DOWN AND THRU ROOF. PROVIDE ROOF CURB.
3. PROVIDE UPBLAST FAN ARRANGEMENT WITH 5'-0" VERTICAL DISCHARGE DUCT TO TERMINATE WITH BIRDSCREEN.
4. CONNECT NEW 12" CHWS & CHWR PIPING TO EXISTING CHILLED WATER PIPING VALVES AND BLIND FLANGE PROVIDED UNDER CHARLES ST. PROJECT. EXTEND WITH NEW 12" CHWS& CHWR PIPING UP AND INTO BASEMENT EMERGENCY DEPT. WITHIN PIPING SHAFT. ALL WORK ASSOCIATED WITH NEW 12" CHWS& CHWR PIPING SHALL BE BID AND PRICED UNDER ADD ALTERNATE NO. 11.
5. 3/4" LPR DRIP TO RUN OVER AND CONNECT INTO EXISTING CP-6 CONDENSATE RECEIVER INLET.

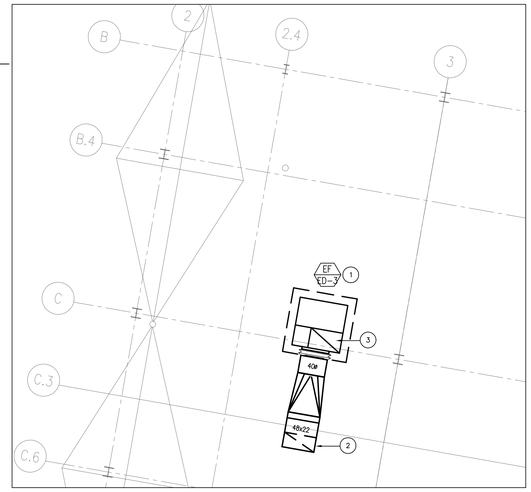

ROOF PART PLAN

SCALE:1/8"=1'-0"

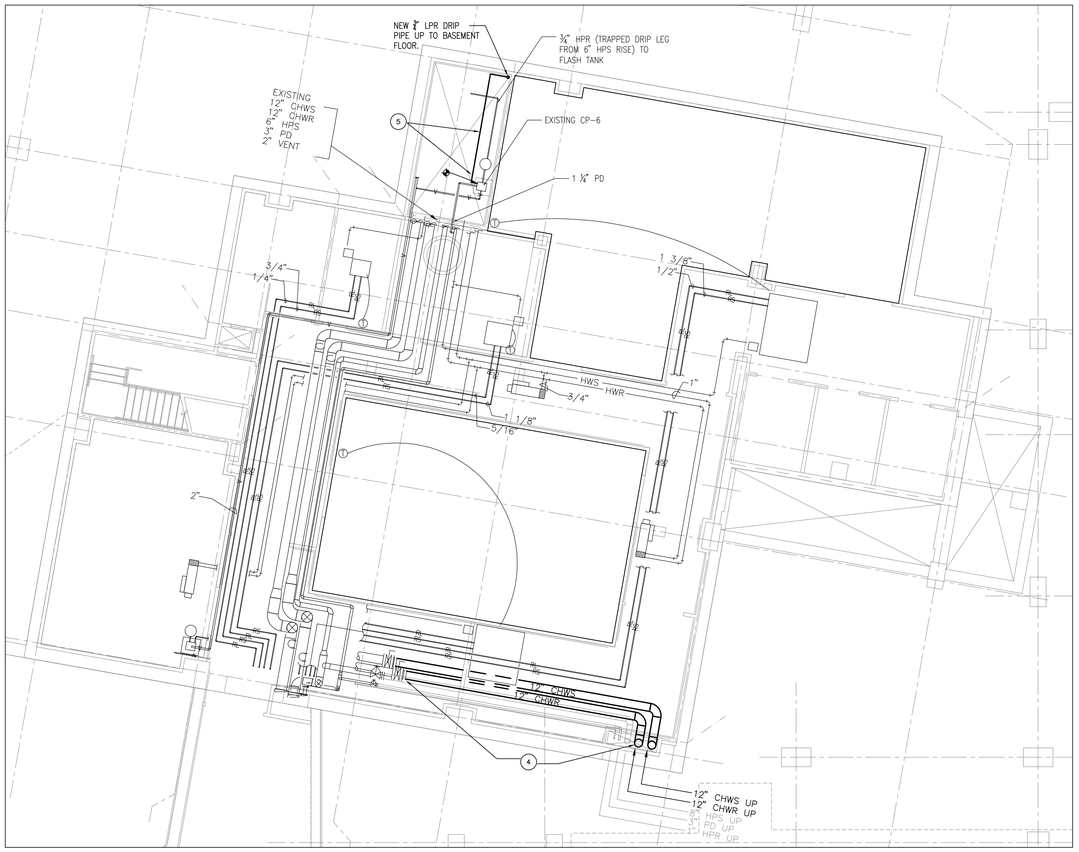

SUB-BASEMENT PART PLAN

SCALE:1/8"=1'-0"

MARK	ISSUE DATE	DESCRIPTION
BID	12/14/07	BID SET

Issue Log

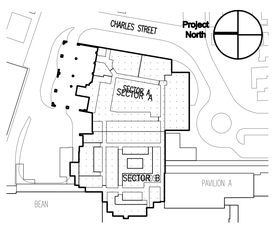

Key Plan

TRO Jung|Brannen

ARCHITECTURE INTERIOR DESIGN ENGINEERING MASTER PLANNING

22 Boston Wharf Road, Boston, Massachusetts 02210

Tel 617.502.9400 Fax 617.502.3402 www.trojungbrannen.com

Maine Medical Center

ED Expansion and Renovation

Portland, Maine MMC Project No. 21843

Drawing Title

HVAC PART PLANS AND SECTIONS

Drawn By	FWC	Commission No.	4696
Approved By	MJC	Date Issued	12/14/07

Phase / Package Number	Sheet Number
	H403

Copyright (C) 2007 TRO Jung|Brannen