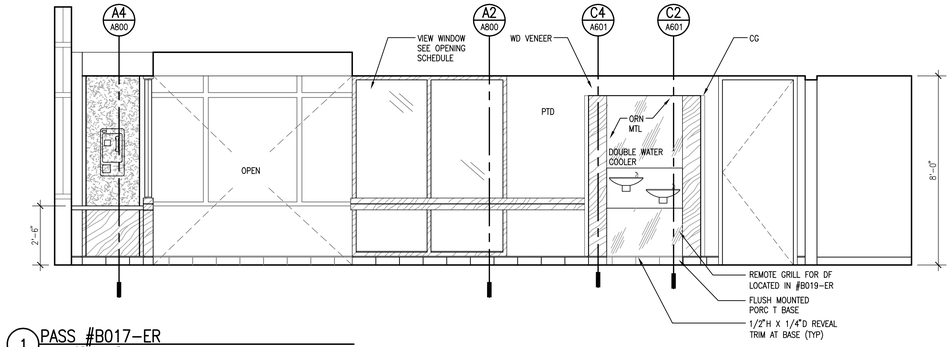

1 PASS #B017-ER
SCALE: 3/8" = 1'-0"

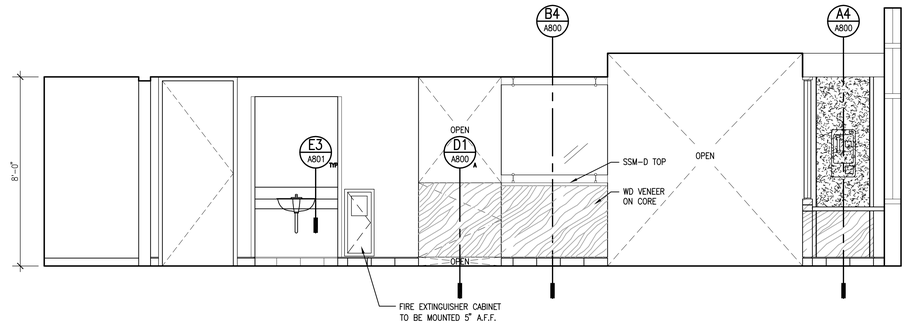

2 PASS #B017-ER
SCALE: 3/8" = 1'-0"

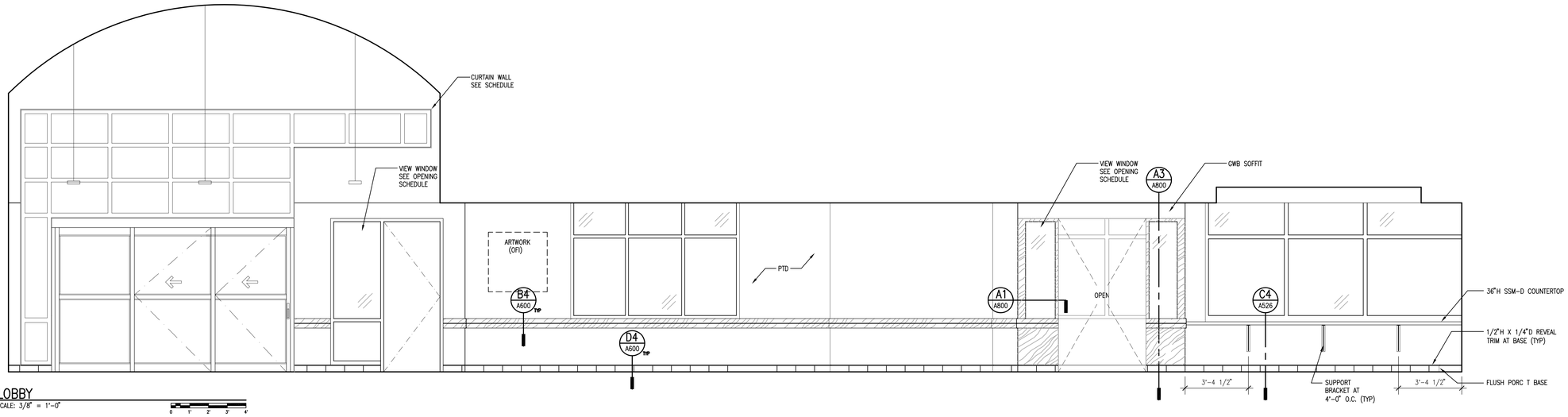

3 LOBBY
SCALE: 3/8" = 1'-0"

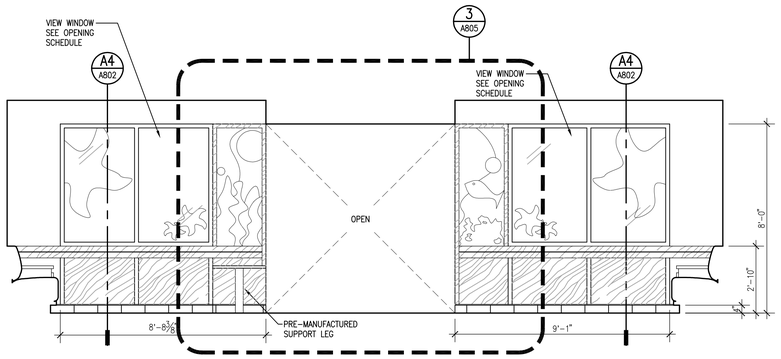

4 PEDIATRIC WAITING #B007-ER
SCALE: 3/8" = 1'-0"

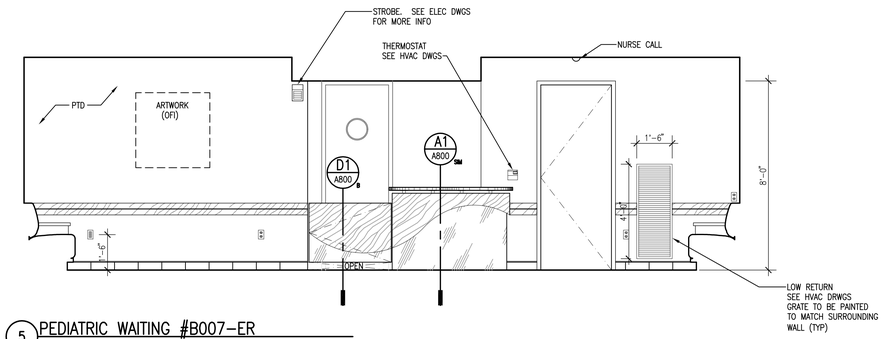

5 PEDIATRIC WAITING #B007-ER
SCALE: 3/8" = 1'-0"

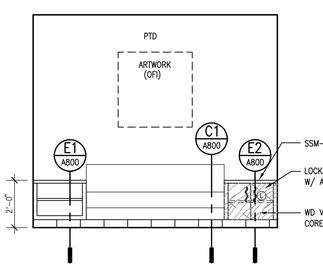

6 PEDIATRIC WAITING #B007-ER
SCALE: 3/8" = 1'-0"

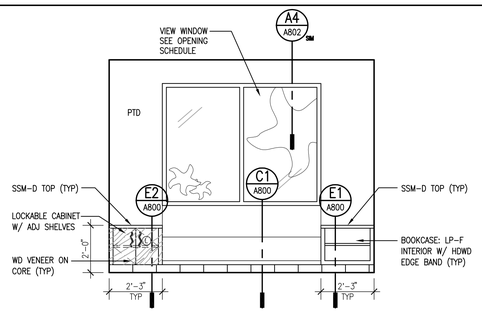

7 PEDIATRIC WAITING #B007-ER
SCALE: 3/8" = 1'-0"

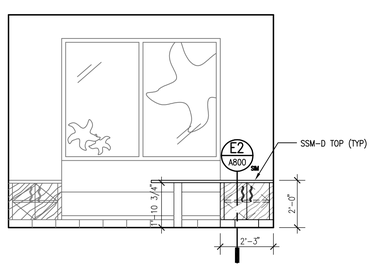

8 PEDIATRIC WAITING #B007-ER
SCALE: 3/8" = 1'-0"

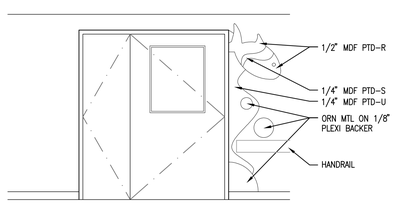

9 PEDIATRIC DOOR ACCENT
SCALE: 3/8" = 1'-0"

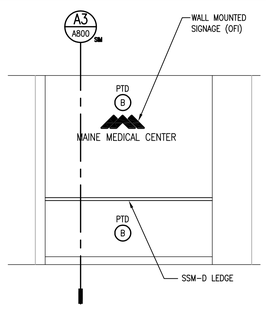

9 CORRIDOR #B025-ER
SCALE: 3/8" = 1'-0"

General Notes:

1. PROVIDE END PANELS WHERE CASEWORK DOES NOT ABUT WALL. -SEE DETAIL AX/AXXX
2. PROVIDE 1-1/2" (MIN.) FILLER PIECE ON WALL & BASE CABINETS AND 1-1/2" (MIN.) EXTENSION TO COUNTER WHERE ENDS OF CASEWORK ABUT WALL
3. FIELD VERIFY ALL DIMENSIONS PRIOR TO FABRICATION AND INSTALLATION.
4. PROVIDE 2-1/2" LIGHT VALANCE WHERE TASK LIGHTING IS INDICATED UNDER WALL CABINETS
5. WHERE VALANCES ARE PROVIDED, EXTEND SIDE PANELS OF WALL CABINET TO MATCH LIGHT VALANCE DIMENSION IF CABINET DOES NOT TERMINATE AT A WALL
6. PROVIDE VALANCES AND BACKSPLASHES IN LONGEST POSSIBLE LENGTH OF MATERIAL TO MINIMIZE JOINTS
7. FILLER PIECE SCRIBED TO SOFFIT AND WALL (TYP) -SEE DETAIL AX/AXXX
8. CUSTOM CABINETS SHALL BE DESIGNATED AS FOLLOWS:

CABINET WIDTH
CABINET HEIGHT
30/36
XX/AXXX
DETAIL/SHEET NO.

9. SEE ELECTRICAL DRAWINGS FOR ADDITIONAL LIGHT

SYMBOL LEGEND

- H HOOK
- A TV CONNECTION
- M MONITOR CONNECTION
- L LIGHT SWITCH
- S SURGICAL LIGHT SWITCH
- SL SLIDE
- V VACUUM
- O OXYGEN
- A MEDICAL AIR
- C STAFF ASSIST/CODE BLUE
- DUPLEX - EMER
- DUPLEX - NORM
- TEL/DATA
- PS PATIENT STATION
- S STAFF REG
- F FIRE AUX MOD
- WALL PHONE
- OTO/ OPTHALMASCOPE

COMPONENTS ON EACH BOOM (4 TYP)

- 1 - SURGICAL LIGHT
- 4 - VACUUM
- 4 - OXYGEN
- 4 - SLIDES
- 2 - MEDICAL AIR
- 4 - RECEPTACLES (NORMAL)
- 6 - RECEPTACLES (EMER)
- 2 - TEL/DATA

MONITOR ON BRACKET WITH POWER AND MONITOR CONNECTION

GLOVE BOX (5)

SHARPS CONTAINER

MARK	ISSUE DATE	DESCRIPTION
BID	12/14/07	BID SET

Issue Log

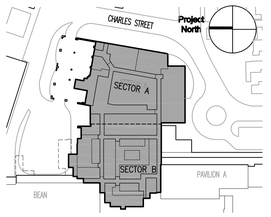

Key Plan

TRO Jung|Brannen
ARCHITECTURE INTERIOR DESIGN ENGINEERING MASTER PLANNING
22 Boston Wharf Road, Boston, Massachusetts 02210
Tel 617.502.9400 Fax 617.502.3402 www.trojungbrannen.com

Maine Medical Center
ED Expansion and Renovation
Portland, Maine MMC Project No. 21843

Drawing Title
INTERIOR ELEVATIONS NO. 1

Drawn By	JT	Commission No.	4696
Approved By	AF	Date Issued	12/14/07

Phase / Package Number	Sheet Number
	A701

Copyright © 2007 TRO Jung|Brannen P:\Maine Medical\4696 - Emergency...A701.dwg