ABBREVIATIONS

A	ACV	ALARM CHECK VALVE ASSEMBLY
	AP	ACCESS PANEL
	AFC	ABOVE FINISH CEILING
	AFF	ABOVE FINISH FLOOR
	AHJ	AUTHORITY HAVING JURISDICTION
	ATC	ACOUSTICAL TILE CEILING
	ATS	AUTOMATIC TRANSFER SWITCH
B	BFP	BACKFLOW PREVENTER
	BFV	BUTTERFLY VALVE
C	CE	CAP EXISTING
	CLG	CEILING
	CONN	CONNECTION
	CONT	CONTINUATION
	CONTR	CONTRACTOR
	CSP	COMBINED STANDPIPE
	CTE	CONNECT TO EXISTING
	CV	CHECK VALVE
D	D	DRAIN
	DCVA	DOUBLE CHECK VALVE ASSEMBLY
	DDCVA	DOUBLE DECTECTOR
	DN	DOWN THROUGH FLOOR
	DP	DROP
	DPV	DRY PIPE VALVE
	DS	DRY SPRINKLER
	DSP	DRY STANDPIPE
	DU	DELUGE SPRINKLER
	DWG	DRAWING
E	EC	ELECTRICAL CONTRACTOR
	EL	ELEVATION
	ELL	ELBOW
	EM	EQUIPMENT MANUFACTURER
	ETR	EXISTING TO REMAIN
	ETX	EXISTING TO BE REMOVED
	EX	EXISTING
F	F	FIRE FEED MAIN
	FCC	FIRE COMMAND CENTER
	FCVA	FLOOR CONTROL VALVE ASSEMBLY
	FDC	FIRE DEPARTMENT CONNECTION
	FDV	FIRE DEPARTMENT VALVE
	FDVC	FIRE DEPARTMENT VALVE CABINET
	FFE	FINISH FLOOR ELEVATION
	FHC	FIRE HOSE CABINET
	FHR	FIRE HOSE RACK
	FHV	FIRE HOSE VALVE
	FLR	FLOOR
	FP	FIRE PUMP
	FPC	FIRE PUMP CONTROLLER
	FPCR	FIRE PROTECTION CONTRACTOR
	FM	FM 200
	FS	FLOW SWITCH
G	GC	GENERAL CONTRACTOR
	GPM	GALLONS PER MINUTE
H	HT	HIGH TEMPERATURE SPRINKLER
	HVAC	HVAC CONTRACTOR
	HYD	HYDRANT
I	IE	INVERT ELEVATION
	INV	INVERT
	IN	INERGEN
	ITD	INSPECTOR'S TEST DRAIN
J	JPC	JOCKEY PUMP CONTROLLER
	JP	JOCKEY PUMP
K	KEC	KITCHEN EQUIPMENT CONTRACTOR
L	LFPC	LIMIT OF FIRE PROTECTION CONTRACT
	LH	LIGHT HAZARD
N	NAS	NO AUTOMATIC SPRINKLERS
	NC	NORMALLY CLOSED
	NEW	NEW PIPING OR EQUIPMENT
	NIC	NOT IN CONTRACT
	NO	NORMALLY OPEN
	NTS	NOT TO SCALE
O	OFCI	OWNER FURNISHED, CONTRACTOR INSTALLED
	OFI	OWNER FURNISHED & INSTALLED
	OH-1	ORDINARY HAZARD ONE
	OH-2	ORDINARY HAZARD TWO
P	PACV	PREACTION CONTROL VALVE
	PC	PLUMBING CONTRACTOR
	PG	PRESSURE GAUGE
	PS	PREACTION SPRINKLER
	PSI	POUNDS PER SQUARE INCH
	PSIG	POUNDS PER SQUARE INCH GAUGE
	PVI	POST VALVE INDICATOR
R	RPBP	REDUCED PRESSURE BACKFLOW PREVENTER
	RN	RISER NIPPLE
	RS	PIPE RISE (NOT THROUGH A FLOOR)
	RV	RELIEF VALVE
S	SF	SQUARE FEET
	SP	STANDPIPE
	SPR	SPRINKLER
	STR	STRAINER
T	TEE	PIPING BRANCH TAKEOFF
	TH	FIRE PUMP TEST HEADER
	TOP	TOP PIPE ELEVATION
	TYP	TYPICAL
U	UN	UNION
	UP	UP (THROUGH SLAB ABOVE)
	UP&DN	UP&DN (THROUGH FLOOR SLAB)
W	WMG	WATER MOTOR GONG
	WS	WET SPRINKLER
	WTS	WATER TIGHT SLEEVE

GENERAL NOTES

DEMOLITION

1. DISCONNECT AND DISMANTLE EXISTING SPRINKLER AND BRANCH PIPING AND LEAVE DEBRIS AND DISCONNECTED MATERIAL ON THE FLOOR FOR REMOVAL UNDER SECTION 02070 – SELECTIVE DEMOLITION.
2. ALL EXISTING SPRINKLER MAINS, STANDPIPES AND DRAIN PIPING TO REMAIN SHALL BE KEPT ACTIVE THROUGHOUT DEMOLITION AND CONSTRUCTION. CONTRACTOR SHALL VERIFY EXACT LOCATIONS OF CONNECTIONS TO EXISTING SPRINKLER MAINS WHERE NEW CONNECTIONS ARE TO MADE.
3. CONTRACTOR SHALL VERIFY IN FIELD AND/OR REFERENCE OWNER'S AS-BUILT DRAWINGS FOR EXACT LOCATIONS OF FIRE PROTECTION SYSTEM PIPING, SPRINKLERS, VALVES AND SIZES.
4. IN THE EVENT OF ANY FIRE PROTECTION SYSTEM SHUTDOWNS NECESSARY FOR DEMOLITION OR NEW WORK, THE CONTRACTOR SHALL RETURN FIRE PROTECTION SYSTEM TO ITS ORIGINAL OPERATING CONDITION AT THE END OF EACH WORK DAY.
5. FIRE PROTECTION CONTRACTOR SHALL MODIFY EXISTING BRANCH LINES AND FEED MAINS AS REQUIRED TO AVOID CONFLICT WITH PROPOSED DUCTWORK AND LIGHTING INSTALLATIONS. CONTRACTOR SHALL COORDINATE WITH HVAC AND ELECTRICAL CONTRACTORS BEFORE WORK COMMENCES TO VERIFY RELOCATION OF EXISTING SPRINKLER/STANDPIPE SYSTEMS.

DRAWING LIST

FIRE PROTECTION

FP001	FIRE PROTECTION LEGEND, NOTES, DETAILS, AND ABBREVIATIONS
FP208.1	FIRE PROTECTION GARAGE SUB-LEVEL 6 PLAN
FP208.5.1	FIRE PROTECTION GARAGE SUB-LEVEL 5 PLAN
FP208.4.1	FIRE PROTECTION GARAGE SUB-LEVEL 4 PLAN
FP208.3.1	FIRE PROTECTION GARAGE SUB-LEVEL 3 PLAN
FP208.2.1	FIRE PROTECTION GARAGE SUB-LEVEL 2 PLAN
FP208.1.1	FIRE PROTECTION GARAGE SUB-LEVEL 1 PLAN
FP208.1	FIRE PROTECTION GARAGE BASEMENT PLAN
FP200.1	FIRE PROTECTION GARAGE GROUND LEVEL PLAN
FP201.1	FIRE PROTECTION GARAGE FIRST LEVEL PLAN
FP202.1	FIRE PROTECTION GARAGE SECOND LEVEL PLAN
FP203.1	FIRE PROTECTION GARAGE THIRD LEVEL PLAN
FP204.1	FIRE PROTECTION GARAGE FOURTH LEVEL PLAN
FP206.1	FIRE PROTECTION GARAGE ROOF PLAN
FP208.1.2	FIRE PROTECTION CONNECTOR SUB-LEVEL 1 PLAN
FP208.2	FIRE PROTECTION CONNECTOR BASEMENT PLAN – RENOVATION
FP200.2	FIRE PROTECTION CONNECTOR GROUND LEVEL PLAN
FP203.3	FIRE PROTECTION HELIPORT THIRD LEVEL PLAN
FP300	FIRE PROTECTION RISER DIAGRAM

DESIGN CRITERIA

1. OCCUPANCY CLASSIFICATION: LIGHT HAZARD
   AREAS: CORRIDORS
   TOILET ROOMS
   .
   .
   .
   ALL OTHER AREAS NOT DEFINED
   DENSITY: 0.10 GPM/FT^2
   AREA OF APPLICATION: 1500 FT^2
   COVERAGE PER SPRINKLER: 225 FT^2
   INSIDE HOSE STREAM: 100 GPM
   OUTSIDE HOSE STREAM: 100 GPM
2. OCCUPANCY CLASSIFICATION: ORDINARY HAZARD GRP. 1
   AREAS: MECHANICAL ROOMS
   STORAGE ROOMS
   .
   .
   .
   DENSITY: 0.15 GPM/FT^2
   AREA OF APPLICATION: 1500 FT^2
   COVERAGE PER SPRINKLER: 130 FT^2
   INSIDE HOSE STREAM: 100 GPM
   OUTSIDE HOSE STREAM: 250 GPM
3. OCCUPANCY CLASSIFICATION: ORDINARY HAZARD GRP 2
   AREAS: MECHANICAL ROOMS
   STORAGE ROOMS
   .
   .
   .
   DENSITY: 0.20 GPM/FT^2
   AREA OF APPLICATION: 1500 FT^2
   COVERAGE PER SPRINKLER: 130 FT^2
   INSIDE HOSE STREAM: 100 GPM
   OUTSIDE HOSE STREAM: 250 GPM
4. OCCUPANCY CLASSIFICATION: ORDINARY HAZARD GRP 1
   AREAS: PARKING GARAGE (DRY)
   .
   .
   .
   DENSITY: 0.15 GPM/FT^2
   AREA OF APPLICATION: 1950 FT^2
   COVERAGE PER SPRINKLER: 130 FT^2
   INSIDE HOSE STREAM: 100 GPM
   OUTSIDE HOSE STREAM: 250 GPM

GOVERNING PARTIES

OWNER'S INSURANCE UNDERWRITER	CHUBB
AUTHORITY HAVING JURISDICTION	PORTLAND FIRE PREVENTION LT. MCDOUGALL

General Notes:

1. THIS IS A STANDARD SYMBOL LIST. ALL SYMBOLS MAY NOT NECESSARILY APPEAR ON THE FLOOR PLANS OR DETAIL SHEETS. ONLY THOSE INDICATED ON THE FLOOR PLANS AND DETAILS SHEETS SHOULD BE USED, AND ALL OTHERS SHOULD BE DISREGARDED.

PIPING LEGEND

GENERAL

- EXISTING PIPING TO REMAIN
- EXISTING PIPING TO BE REMOVED
- NEW PIPING

WET

- F — FIRE FEED MAIN PIPING
- SD — SPRINKLER DRAIN PIPING
- FDC — FIRE DEPARTMENT CONNECTION PIPING
- SP — STANDPIPE PIPING
- TH — FIRE PUMP TEST HEADER PIPING
- S — SPRINKLER PIPING

DRY

- DS — DRY SPRINKLER PIPING
- DU — DELUGE SPRINKLER PIPING
- PS — PREACTION SPRINKLER PIPING

CLEAN AGENT

- FM — FM 200 PIPING
- IN — INERGEN PIPING

SYMBOLS LEGEND

- A1.2 / E — COLUMN LINE DESIGNATION
- NAS — NO AUTOMATIC SPRINKLERS
- CONNECT TO EXISTING
- X / XX — REVISION DESIGNATION
- X / AXXX — DRAWING NUMBER / SHEET NUMBER — DETAIL DESIGNATION
- X — HYDRAULIC REFERENCE POINT

PIPING SYMBOL LEGEND

PIPING

- DOWN THROUGH FLOOR
- DROP (OR RISE)
- FLOW ARROW
- FS — FLOW SWITCH
- PIPING BRANCH TAKEOFF
- PG — PRESSURE GAUGE
- PS — PRESSURE SWITCH
- TS — TAMPER SWITCH
- UNION
- UP (THROUGH SLAB ABOVE)
- UP & DOWN (THROUGH FLOOR SLAB)

VALVES

- ALARM CHECK VALVE
- BALL VALVE
- BFV — BUTTERFLY VALVE
- CHECK VALVE
- DCVA — DOUBLE CHECK VALVE ASSEMBLY
- DPV — DRY PIPE VALVE
- FIRE DEPARTMENT CONNECTION (FLUSH)
- FIRE DEPARTMENT CONNECTION (EXPOSED)
- FIRE DEPARTMENT VALVE
- FDVC — FIRE DEPARTMENT VALVE CABINET
- FHC — FIRE HOSE CABINET
- FCVA — FLOOR CONTROL VALVE ASSEMBLY
- PRESSURE REGULATING VALVE ASSEMBLY
- PREACTION CONTROL VALVE
- RV — RELIEF VALVE
- STRAINER
- SHUT OFF VALVE

SPRINKLERS

- EXISTING SPRINKLER TO REMAIN
- EXISTING SPRINKLER TO BE REMOVED
- UPRIGHT SPRINKLER
- CONCEALED SPRINKLER
- RECESSED SPRINKLER
- SIDEWALL SPRINKLER
- EXTENDED COVERAGE SIDEWALL SPRINKLER
- DRY PENDENT SPRINKLER
- DS — DRY SIDEWALL SPRINKLER

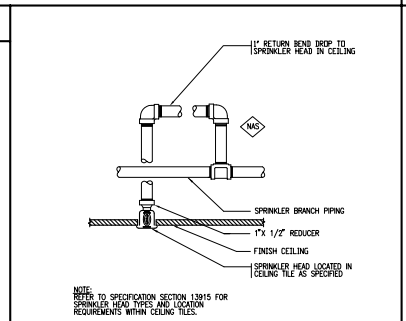

1 CONCEALED SPRINKLER HEAD RETURN BEND DROP
SCALE: NTS

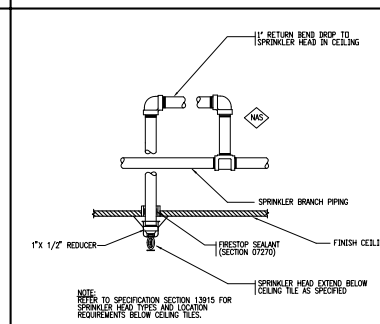

2 PENDENT SPRINKLER ESCUTCHEON RETURN BEND DROP
SCALE: NTS

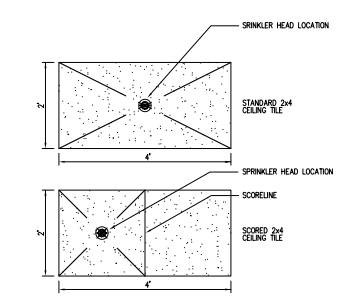

3 LOCATION OF SPRINKLER HEAD IN CEILING PANEL
SCALE: NTS

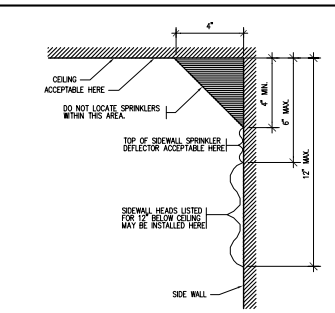

4 LOCATION OF SPRINKLERS AT WALLS
SCALE: NTS

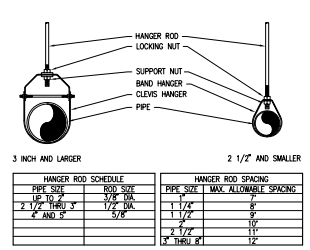

HANGER ROD SCHEDULE	
PIPE SIZE	ROD SIZE
UP TO 2"	3/8" DIA.
2 1/2" THRU 3"	1/2" DIA.
4" AND 5"	5/8"

HANGER ROD SPACING	
PIPE SIZE	MAX. ALLOWABLE SPACING
1"-1/4"	8'
1"-1/2"	9'
2"	10'
2 1/2"	11'
3" THRU 8"	12'

5 SPRINKLER PIPE HANGER INSTALLATION
SCALE: NTS

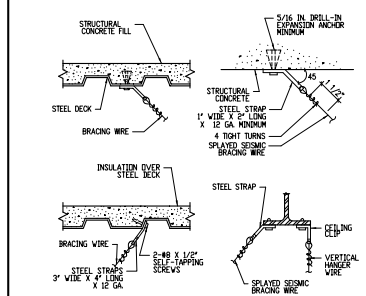

6 SEISMIC CABLE RESTRAINT ATTACHMENTS
SCALE: NTS

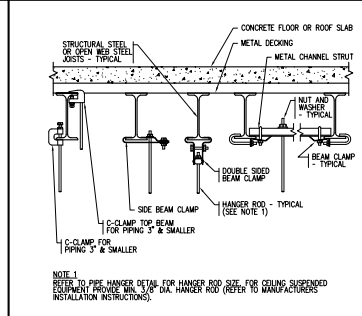

7 TYP METHODS OF SECURING HANGER RODS TO STEEL
SCALE: NTS

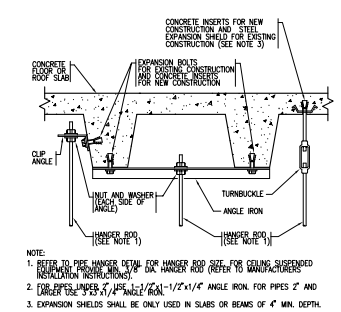

8 METHODS OF SECURING HANGERS TO CONCRETE
SCALE: NTS

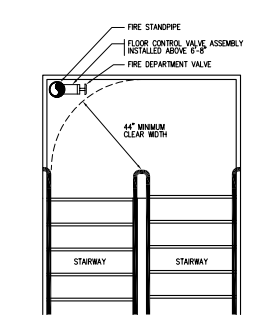

9 FIRE STANDPIPE LOCATION
SCALE: NTS

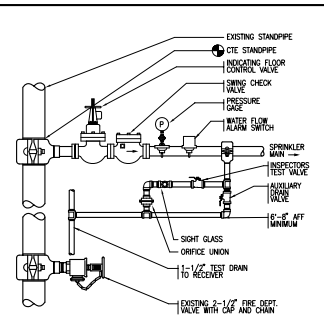

10 FLOOR CONTROL VALVE STATION
SCALE: NTS

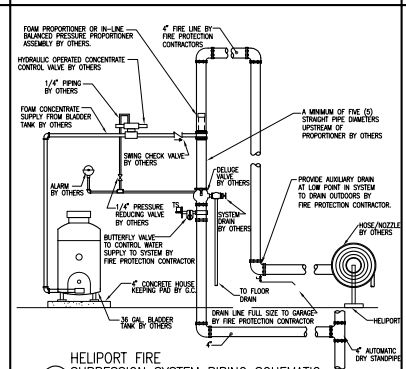

11 HELIPORT FIRE SUPRESSION SYSTEM PIPING SCHEMATIC
SCALE: NTS

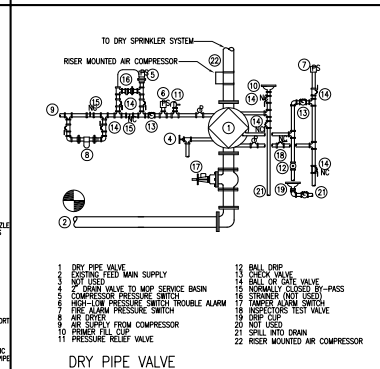

12 DRY PIPE VALVE PIPING SCHEMATIC
SCALE: NTS

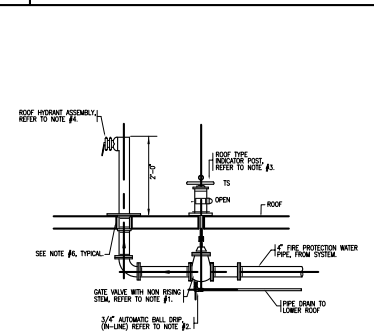

13 ROOF HYDRANT DETAIL
SCALE: NTS

MARK	ISSUE DATE	DESCRIPTION
PERMIT	09/16/04	PERMIT SET
BID	08/26/04	BID SET

Issue Log

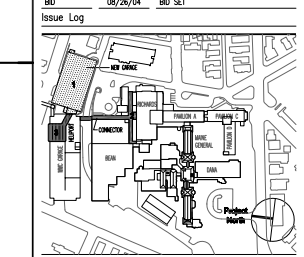

Key Plan

TRO
Architecture
Planning
Engineering
Interior Design
The Ritchie Organization
80 Bridge Street
Newton, MA 02458-1154
617-969-9400

Maine Medical Center
Pkg F - Garage / Vault / Conn / Heliport
Portland, ME
MMC Project No. 21845

Drawing Title
FIRE PROTECTION LEGEND, NOTES, DETAILS, AND ABBREVIATIONS

0' 0 0 0 0

Commission No.	4678	Date Issued	08/26/04
Scale	NTS	Sheet Number	PKG-F
Drawn By	SDB		
Approved By	RMH		
Filename	4678FP001		

Copyright © 2004 The Ritchie Organization

FP001