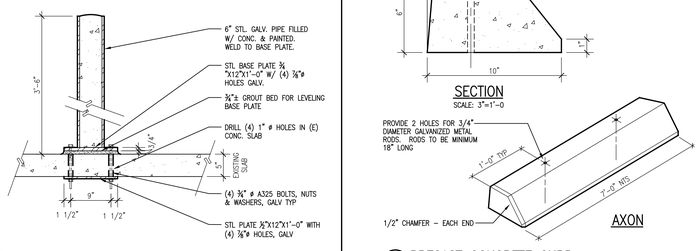

A1 SECTIONAL DETAIL OF BOLLARD
SCALE: 1" = 1'-0"

B1 PRECAST CONCRETE CURB
SCALE: 3" = 1'-0"

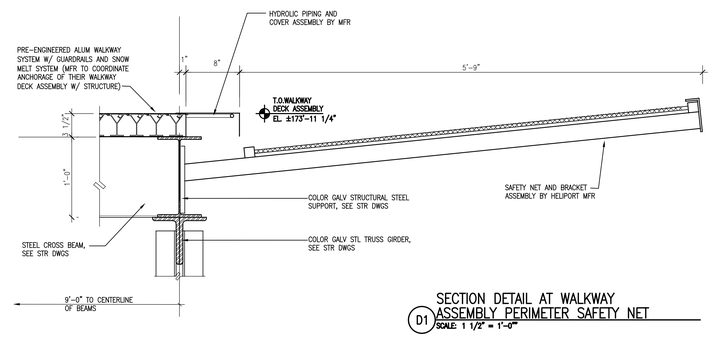

D1 SECTION DETAIL AT WALKWAY ASSEMBLY PERIMETER SAFETY NET
SCALE: 1 1/2" = 1'-0"

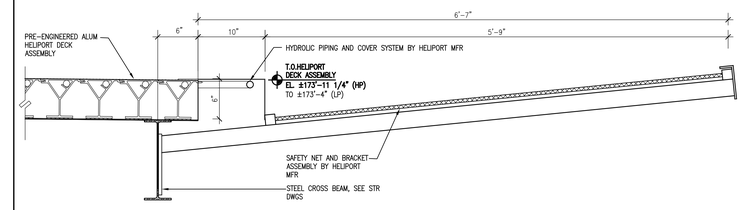

F1 SECTION DETAIL AT HELIPORT PERIMETER HYDROLIC PIPING/SAFETY NET
SCALE: 1 1/2" = 1'-0"

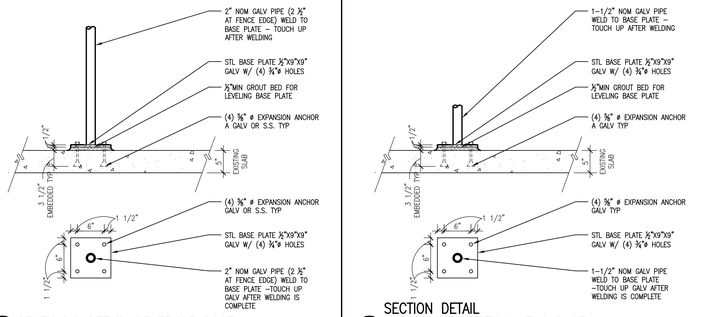

A2 SECTIONAL DETAIL OF FENCE POST
SCALE: 1" = 1'-0"

B2 SECTION DETAIL RAILING CONNECTION AT GARAGE
SCALE: 1" = 1'-0"

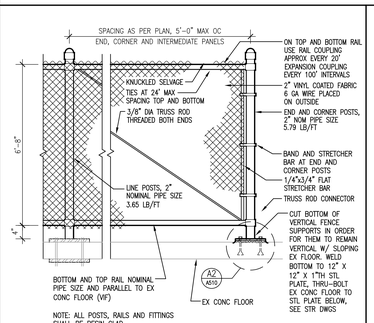

C2 7'-0" HIGH VINYL CLAD CHAIN LINK FENCE
SCALE: 3/4" = 1'-0" REF: A201.3

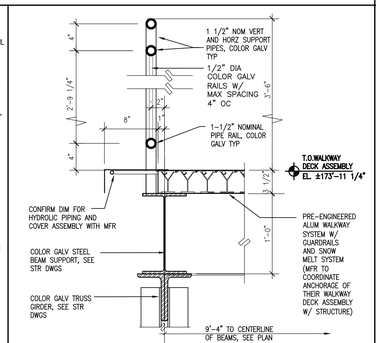

D2 SECTION DETAIL AT WALKWAY DECK
SCALE: 1 1/2" = 1'-0"

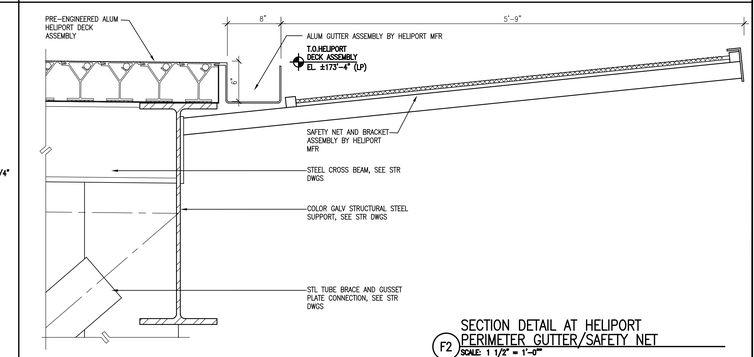

F2 SECTION DETAIL AT HELIPORT PERIMETER GUTTER/SAFETY NET
SCALE: 1 1/2" = 1'-0"

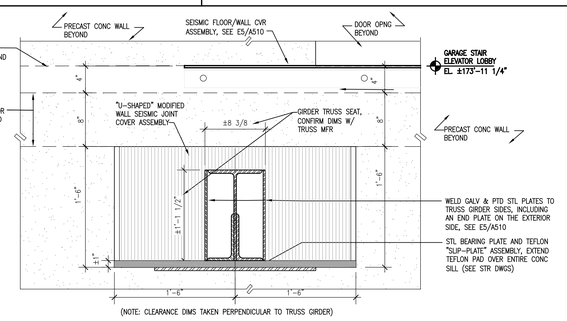

NOTE:

THE WALL EXPANSION JOINT ASSEMBLY SHOWN IS DESIGNED TO SEAL THE POCKET OPENING WATERTIGHT, AS WELL AS ALLOW FOR NORMAL THERMAL AND BUILDING EXPANSION. HOWEVER, IT WAS NOT DESIGNED TO REMAIN INTACT DURING A SEISMIC EVENT, AND WAS INTENDED TO BE EITHER REPAIRED OR REPLACED AFTER SUCH AN OCCURENCE.

(THE FLOOR SEISMIC JOINT COVER ASSEMBLY IS DESIGNED TO REMAIN INTACT DURING AND AFTER A SEISMIC EVENT)

A3 SECTION/ELEVATION DETAIL AT WALKWAY BEAM SEISMIC JOINT ASSEMBLY
SCALE: 1 1/2" = 1'-0" REF: A5/A510, C5/A510, E5/A510

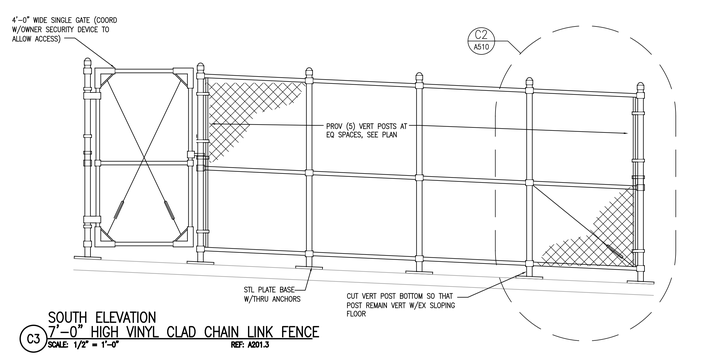

C3 SOUTH ELEVATION
7'-0" HIGH VINYL CLAD CHAIN LINK FENCE
SCALE: 1/2" = 1'-0" REF: A201.3

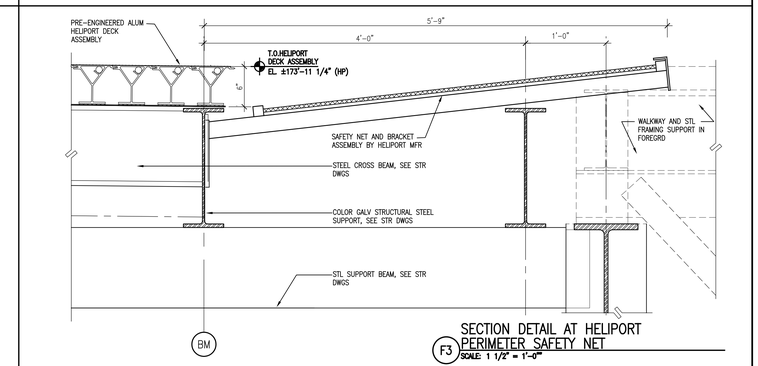

F3 SECTION DETAIL AT HELIPORT PERIMETER SAFETY NET
SCALE: 1 1/2" = 1'-0"

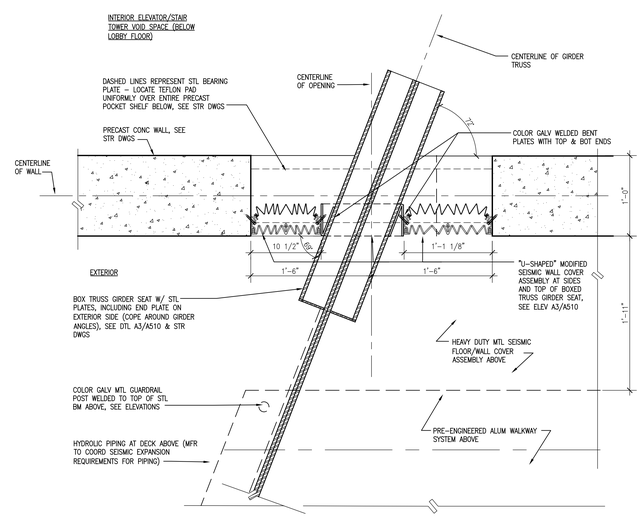

A5 PLAN DETAIL AT WALKWAY WALL SEISMIC COVER ASSEMBLY
SCALE: 1 1/2" = 1'-0" REF: A3/A510, C5/A510, E5/A510

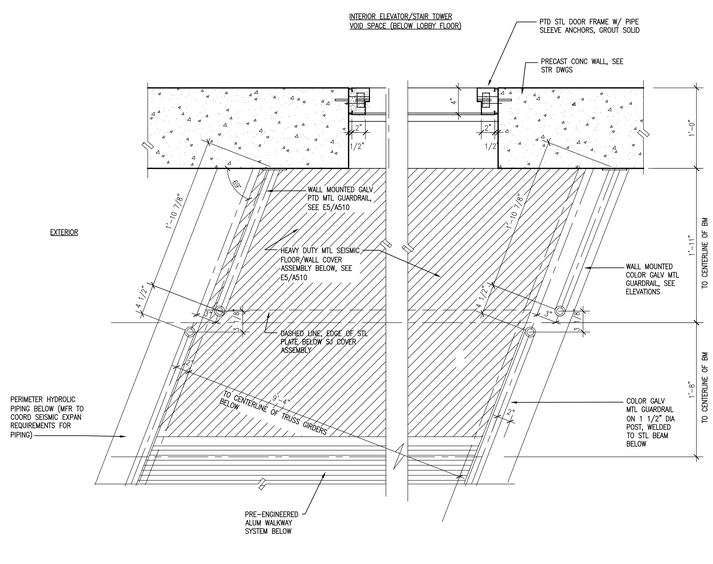

C5 PLAN DETAIL ABOVE WALKWAY FL SEISMIC CVR ASSEMBLY
SCALE: 1 1/2" = 1'-0" REF: A3/A510, A5/A510, E5/A510

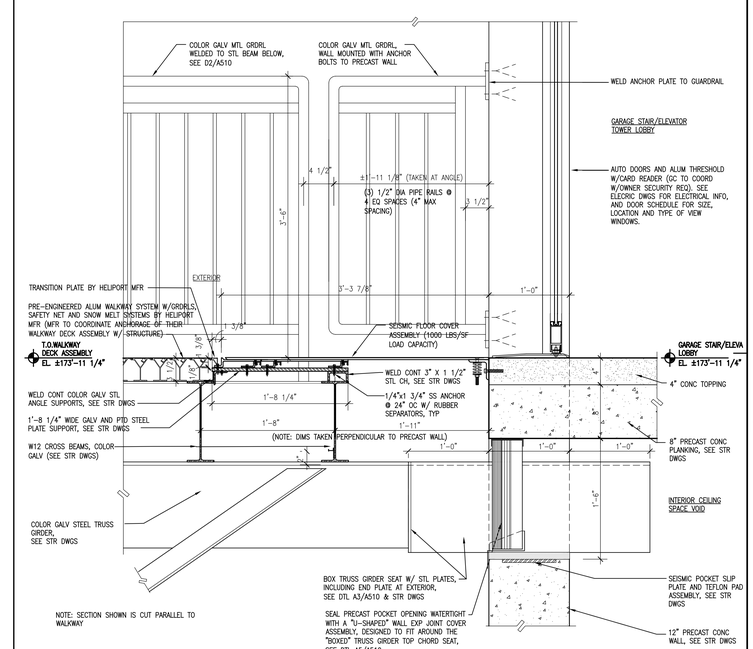

E5 SECTION DETAIL AT WALKWAY SEISMIC COVER ASSEMBLY
SCALE: 1 1/2" = 1'-0" REF: A3/A510, A5/A510, C5/A510

General Notes:

MARK	ISSUE DATE	DESCRIPTION
PERMIT	09/16/04	PERMIT SET
BID	08/26/04	BID SET

Issue Log

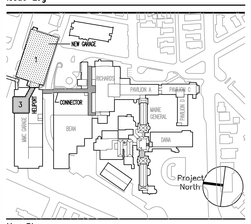

Key Plan

TRO
ARCHITECTU
PLANNING
ENGINEERIN
INTERIO
The Ritchie Organizat
80 Bridge Stre
Newton, MA 02458-1
617-969-94

Maine Medical Center
Pkg F - Garage / Vault / Conn / Heliport
Portland, ME MMC Project No. 21845

Drawing Title
CONSTRUCTION DETAILS NO. 1

Commission No.	4678	Date Issued	08/26/04
Scale	AS NOTED	Sheet Number	PKG-F
Drawn By	FC		A510
Approved By	FC		
Filename	4678A510.dwg		

Copyright © 2004 The Ritchie Organization