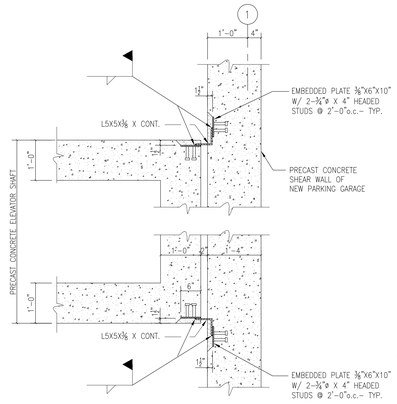

1 PLAN: CONNECTION BETWEEN NEW PRECAST SHEAR WALL & PRECAST ELEVATOR SHAFT ¾" = 1'-0"

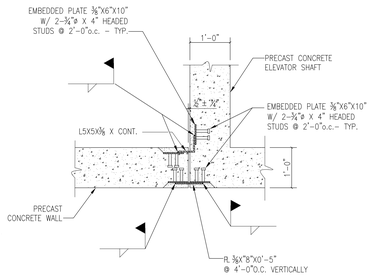

2 PLAN: DETAIL AT CONNECTION BETWEEN ELEVATOR SHAFT AND PRECAST CONCRETE WALL ¾" = 1'-0"

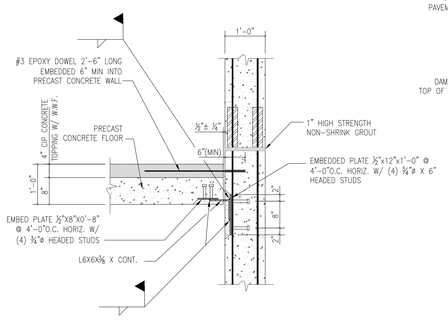

3 SECTION: CONNECTION BETWEEN PRECAST CONCRETE WALL AND PRECAST CONCRETE FLOOR ¾" = 1'-0"

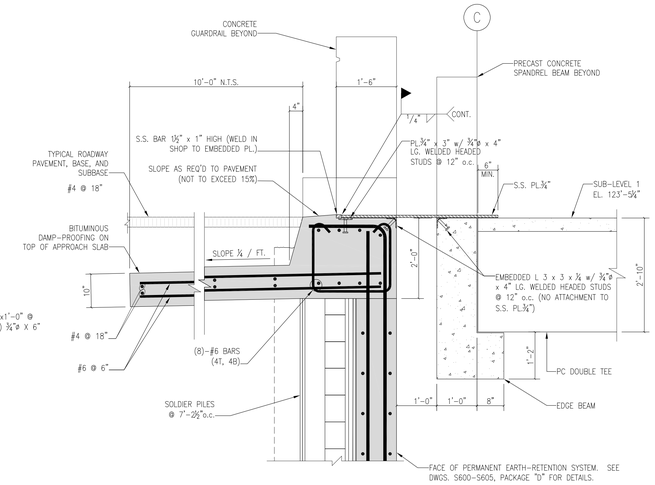

4 SECTION: CRESCENT STREET ENTRANCE TO GARAGE ¾" = 1'-0"

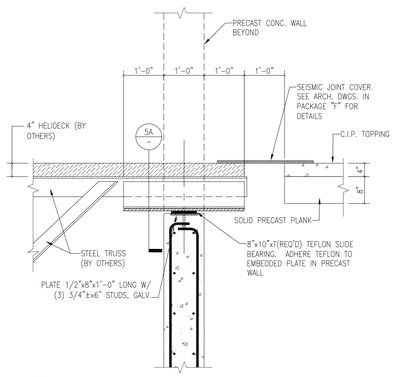

5 SECTION AT SEISMIC POCKETS ¾" = 1'-0"

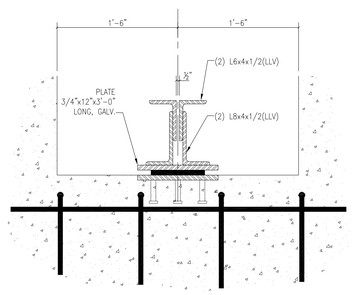

5A SECTION AT SEISMIC POCKETS BEARING PLATE 1½" = 1'-0"

General Notes:

1. CONNECTION DETAILS SHOWN HERE ARE BASED ON PRELIMINARY CALCULATIONS. PRECASTOR SHALL BE RESPONSIBLE FOR FINAL DESIGN OF ALL CONNECTION DETAILS.

SGH
www.sgh.com
Simpson Gumpertz & Heger Inc.
Consulting Engineers

Boston, MA — 41 Seyon Street, Building 1, Suite 500, Waltham, MA 02453 — Telephone: (781) 907 9000, Facsimile: (781) 907 9009
San Francisco, CA — The Landmark at One Market, Suite 600, San Francisco, CA 94105 — Telephone: (415) 495 3700, Facsimile: (415) 495 3550
Washington, DC — 1855 Picard Drive, Suite 220, Rockville, MD 20850 — Telephone: (301) 417 0999, Facsimile: (301) 417 9825

MARK	ISSUE DATE	DESCRIPTION
PERMIT	09/16/04	PERMIT SET
BID	05/17/04	BID SET

Issue Log

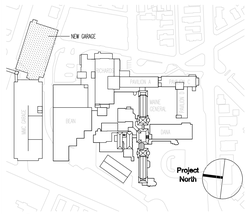

Key Plan

TRO
Architecture
Planning
Engineering
Interior Design
The Ritchie Organization
80 Bridge Street
Newton, MA 02458-1134
617-969-9400

Maine Medical Center
Pkg E - Garage Foundation and Precast
Portland, ME — MMC Project No. 21845

Drawing Title
GARAGE PRECAST CONCRETE SECTIONS & DETAILS

0' 4' 8' 16' 32'

Commission No.	4678	Date Issued	05/17/04
Scale	AS NOTED	Sheet Number	PKG-E
Drawn By	SWW		S411
Approved By	JHT/JJZ		
Filename	S403		

Copyright © 2004 The Ritchie Organization