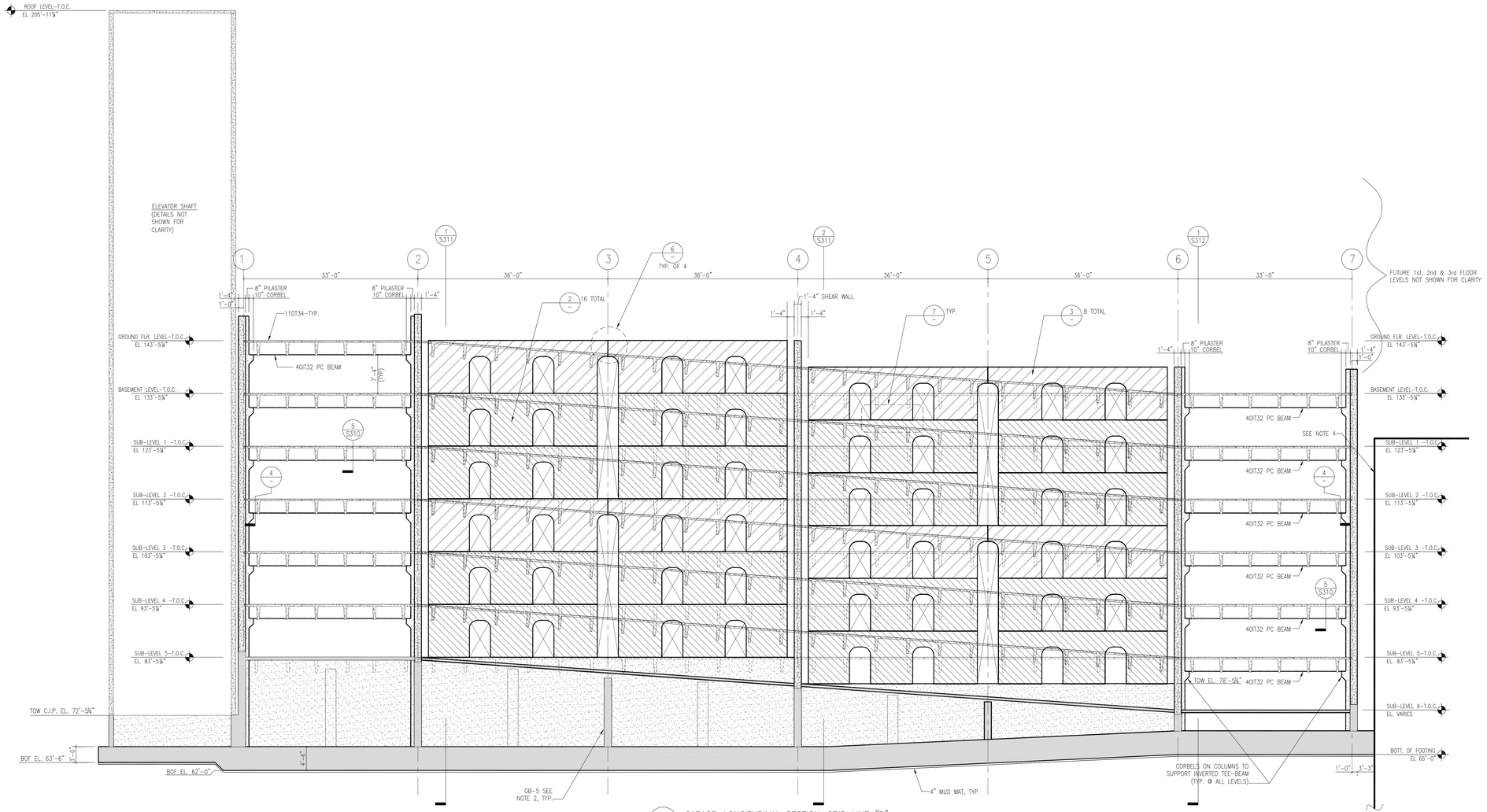

1 GARAGE–LONGITUDINAL SECTION–GRID LINE "B"
1/4" = 1'–0"

General Notes:

1. ELEVATIONS:

SUB–LEVEL 6:	VARIES
SUB–LEVEL 5:	83'–5¾"
SUB–LEVEL 4:	93'–5¾"
SUB–LEVEL 3:	103'–5¾"
SUB–LEVEL 2:	113'–5¾"
SUB–LEVEL 1:	123'–5¾"
BASEMENT LEVEL:	133'–5¾"
GROUND FLOOR LEVEL:	143'–5¾"
FUTURE 1ST FLOOR LEVEL:	153'–5¾"
FUTURE 2ND FLOOR LEVEL:	163'–5¾"
FUTURE 3RD FLOOR LEVEL:	173'–5¾"

2. SEE GRADE BEAM SCHEDULE ON SHEET S402 FOR DIMENSIONS AND REINFORCING IN C.I.P. CONCRETE GRADE BEAMS.

3. PRECASTER SHALL PROVIDE BOXOUTS AT TOP OF STEMS OF DOUBLE–TEES AS REQUIRED FOR PASSAGE OF ELECTRICAL CONDUITS AND OTHER UTILITIES. SEE DRAWINGS BY OTHERS FOR EXACT SIZE AND LOCATIONS OF UTILITIES.

4. FACE OF EARTH–RETENTION SYSTEM. SEE PACKAGE "D" FOR DETAILS.

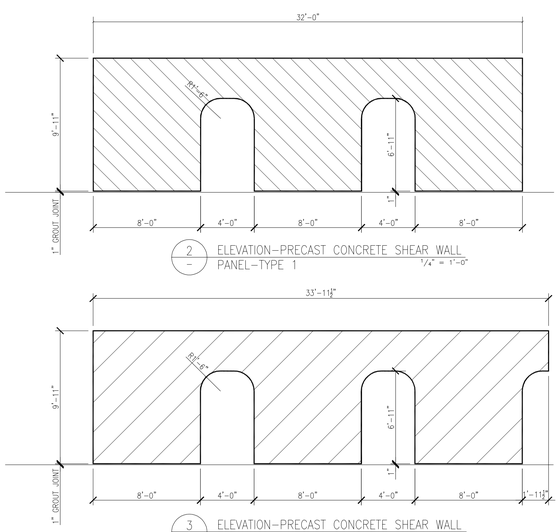

2 ELEVATION–PRECAST CONCRETE SHEAR WALL PANEL–TYPE 1
1/4" = 1'–0"

3 ELEVATION–PRECAST CONCRETE SHEAR WALL PANEL–TYPE 2
1/4" = 1'–0"

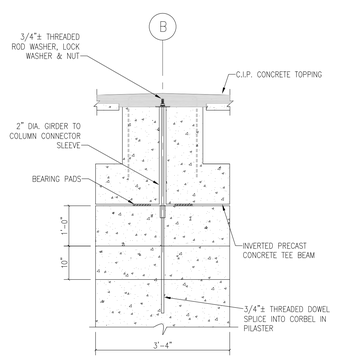

4 SECTION: PRECAST CONCRETE TEE BEAM BEARING AT CORBEL IN PILASTER
3/4" = 1'–0"

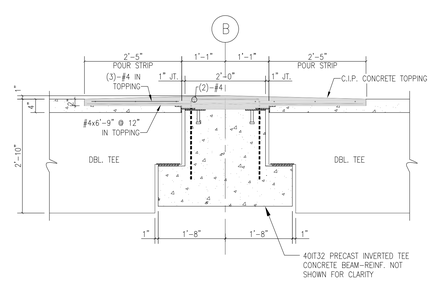

5 SECTION: PRECAST CONCRETE BEAM ALONG GRID LINE "B"
3/4" = 1'–0"

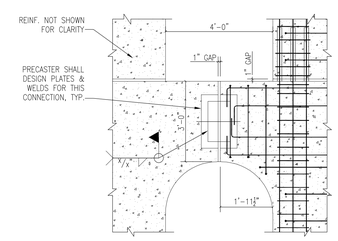

6 DETAIL: WELDED SHEAR CONNECTOR BETWEEN ADJACENT PRECAST PANELS
1/2" = 1'–0"

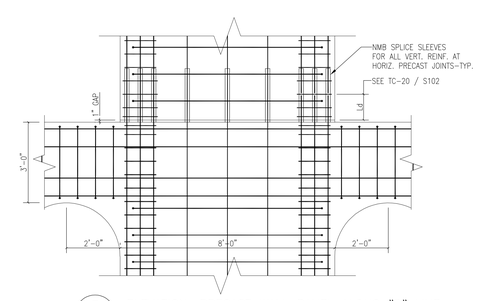

7 ELEVATION: PRECAST WALL PANEL ALONG "B" LINE
1/2" = 1'–0"

SGH
Simpson Gumpertz & Heger Inc.
Consulting Engineers
www.sgh.com

Boston, MA — 41 Seyon Street, Building 1, Suite 500, Waltham, MA 02453 — Telephone: (781) 907 9000, Facsimile: (781) 907 9009
San Francisco, CA — The Landmark at One Market, Suite 600, San Francisco, CA 94105 — Telephone: (415) 495 3700, Facsimile: (415) 495 3550
Washington, DC — 1855 Piccard Drive, Suite 220, Rockville, MD 20850 — Telephone: (301) 417 0999, Facsimile: (301) 417 9825

MARK	ISSUE DATE	DESCRIPTION
PERMIT	09/16/04	PERMIT SET
BID	05/17/04	BID SET

Issue Log

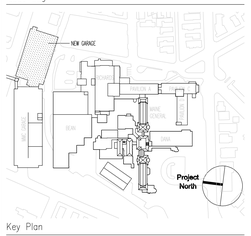

Key Plan

TRO
Architecture Planning Engineering Interior Design
The Ritchie Organization
80 Bridge Street
Newton, MA 02458-1134
617-969-9400

Maine Medical Center
Pkg E - Garage Foundation and Precast
Portland, ME — MMC Project No. 21845

Drawing Title
GARGAGE PRECAST CONCRETE LONGITUDINAL SECTION

0' 4' 8' 16' 32'

Commission No.	4678	Date Issued	05/17/04
Scale	AS NOTED	Sheet Number	PKG-E
Drawn By	SWW		
Approved By	JHT/JJZ		
Filename	S310		S310

Copyright © 2004 The Ritchie Organization