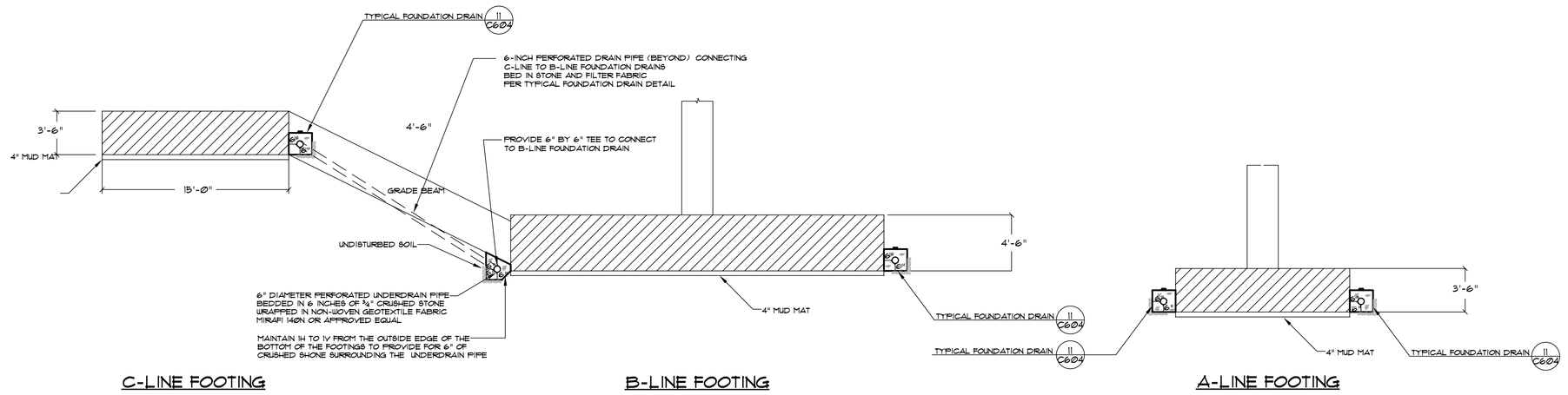

1 SECTION: GARAGE FOUNDATION DRAINAGE
NOT TO SCALE

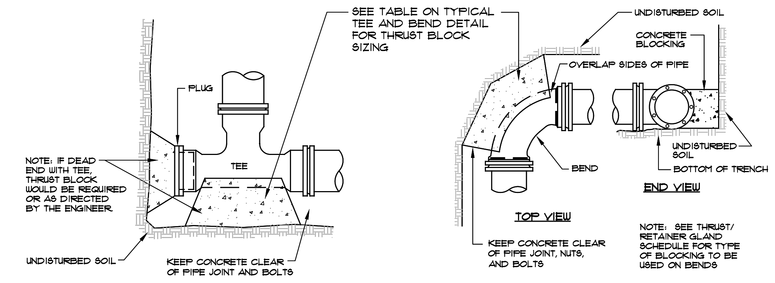

8 STANDARD TEE AND BEND BLOCKING
NOT TO SCALE

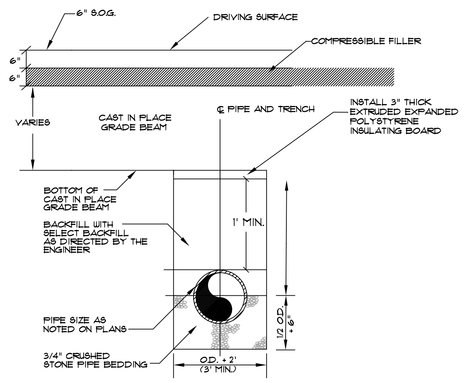

4 TYPICAL UNDERDRAIN TRENCH SECTION UNDER GRADE BEAM
NOT TO SCALE

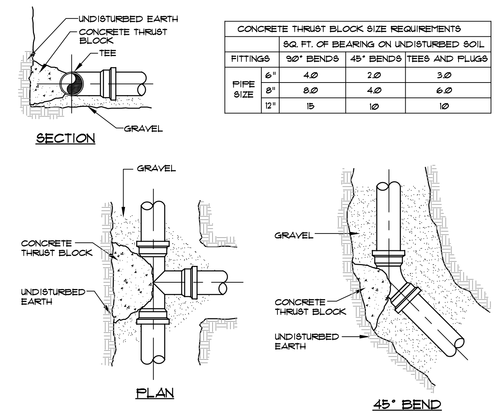

CONCRETE THRUST BLOCK SIZE REQUIREMENTS				
		SQ. FT. OF BEARING ON UNDISTURBED SOIL		
FITTINGS		90° BENDS	45° BENDS	TEES AND PLUGS
PIPE SIZE	6"	4.0	2.0	3.0
	8"	8.0	4.0	6.0
	12"	15	10	10

9 TEE AND BEND DETAIL
NOT TO SCALE

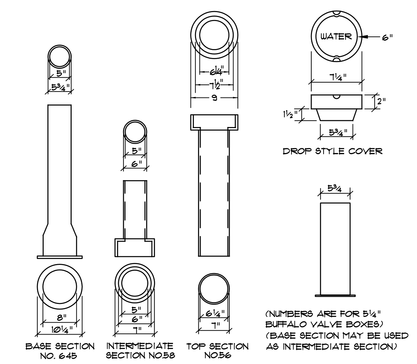

10 VALVE BOX & COVER
NOT TO SCALE

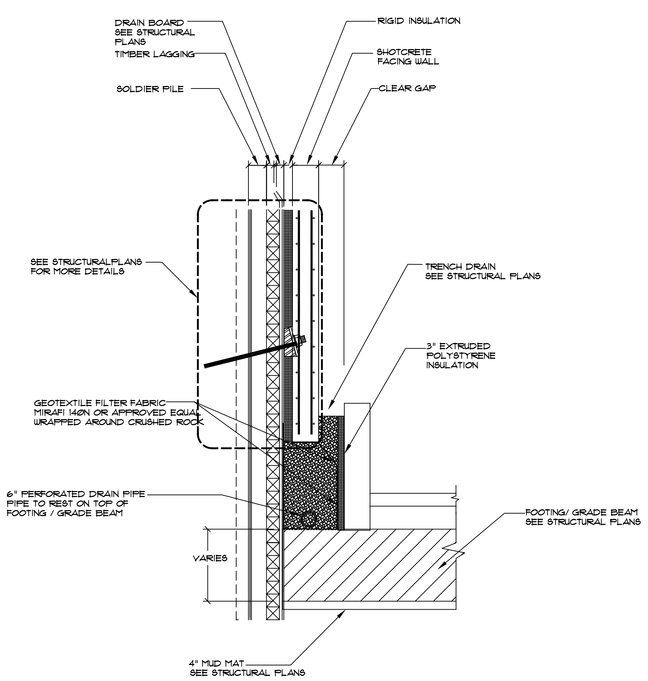

2 SECTION: EARTH RETENTION SYSTEM DRAINAGE
NOT TO SCALE

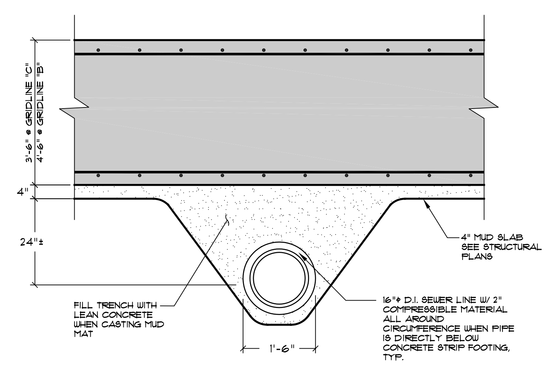

6 SECTION AT SEWER LINE TRENCH UNDER FOOTING
NOT TO SCALE

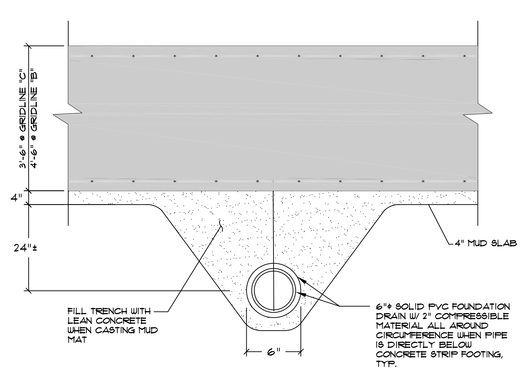

7 SECTION AT FOUNDATION DRAIN UNDER FOOTING
NOT TO SCALE

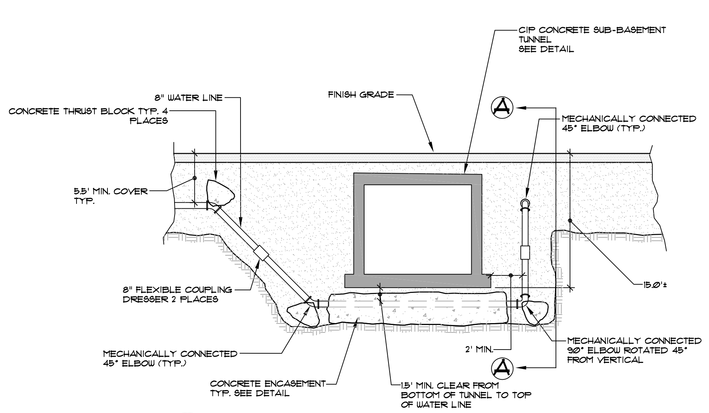

3 SECTION AT WATER LINE UNDER SERVICE TUNNEL
NOT TO SCALE

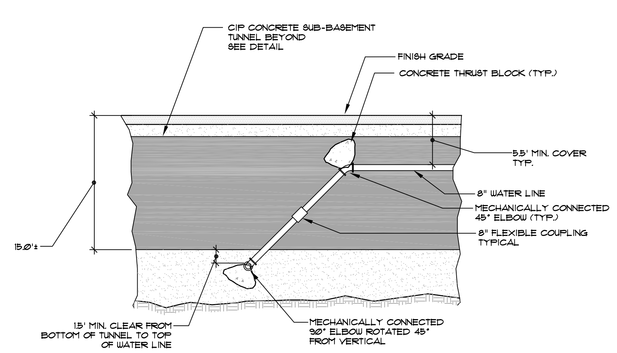

SECTION A-A

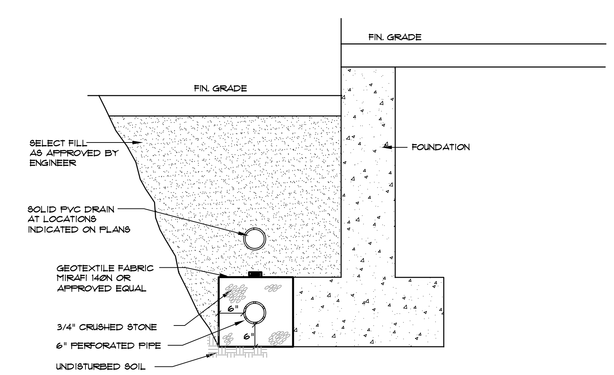

11 TYPICAL FOUNDATION DRAIN SECTION
NOT TO SCALE

General Notes:

MARK	ISSUE DATE	DESCRIPTION
PERMIT	09/16/04	PERMIT SET
BID	08/31/04	BID SET

Issue Log

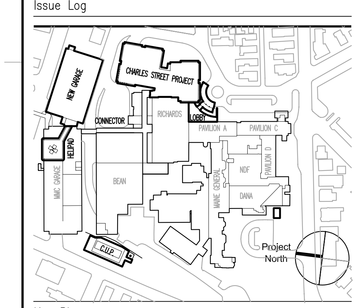

Key Plan

TRO
ARCHITECTURE
PLANNING
ENGINEERING
INTERIOR DESIGN
The Ritchie Organization
80 Bridge Street
Newton, MA 02458-1134
617-969-9400

Maine Medical Center
Pkg C - Site Utitlities
Portland, Maine MMC Project No. 21846

Drawing Title
DETAILS

Commission No.	4677	Date Issued	08/31/04
Scale	AS SHOWN	Sheet Number	PKG-C
Drawn By	FCL		C604
Approved By	DLR		
Filename	0104605		

Copyright © 2004 The Ritchie Organization