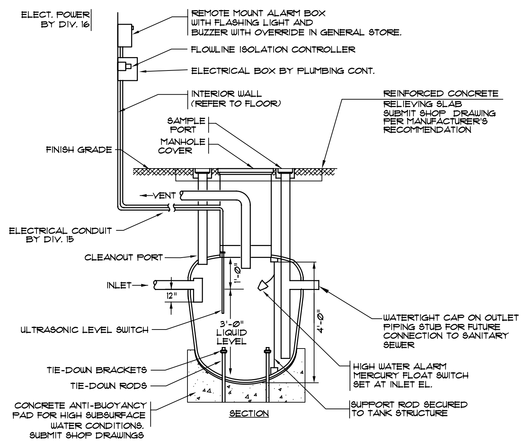

1 500 GAL HOLDING TANK
NOT TO SCALE

NOTE:
CONTRACTOR TO SUBMIT COMPLETE SHOP DRAWING FOR PACKAGE SYSTEM INCLUDING HOLD DOWN SLAB DETAILS, FOUNDATION CALCULATIONS AND DETAILS OF RELIEVING SLAB REINFORCEMENT REQUIRED FOR H-20 LOADING.

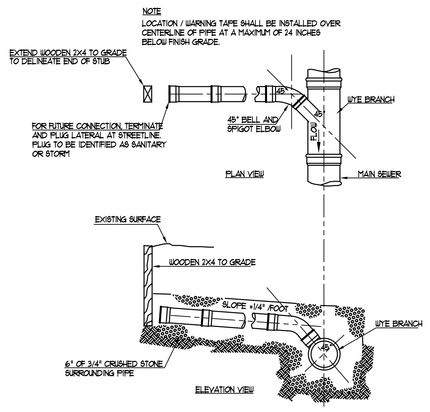

2 TYPICAL HOUSE LATERAL WYE CONNECTION DETAIL
NOT TO SCALE

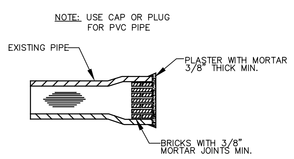

3 MASONRY PLUG DETAIL
NOT TO SCALE

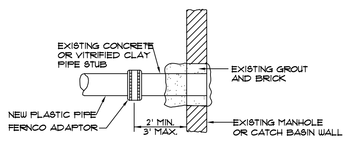

METHOD 4 - NEW PIPE TO EXISTING STRUCTURE STUB

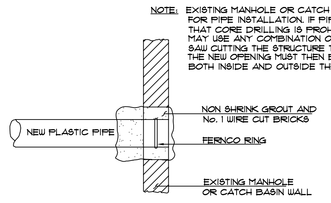

METHOD 3 - NEW PIPE INTO EXISTING STRUCTURE

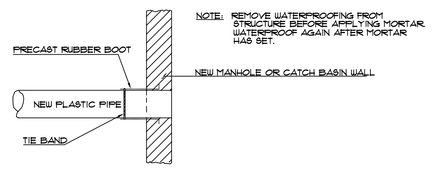

METHOD 2 - NEW CONSTRUCTION

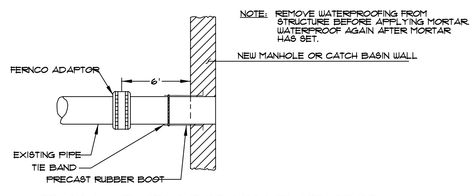

METHOD 1 - EXISTING PIPE INTO NEW STRUCTURE

4 PLASTIC PIPE CONNECTION DETAIL
NOT TO SCALE

TABLE OF DIMENSIONS
PVC, TRUSS, CMP, & POLYETHYLENE PIPE

D	A	B	C	VOL. BASE /100' UNSHETTED O. SOCKET
8"	3'- 0"	1'- 1 1/2"	0'- 1/2"	7.358 10 3/8"
10"	3'- 0"	1'- 0 3/8"	0'- 0 5/8"	7.658 12 1/2"
12"	3'- 0"	0'- 11 3/8"	0'- 0 5/8"	7.932 14 1/2"
14"	3'- 0"	0'- 10 3/8"	0'- 0 5/8"	8.178 16 3/4"
16"	3'- 0"	0'- 9 1/4"	0'- 0 3/4"	8.447 19"
18"	3'- 0"	0'- 8 1/4"	0'- 0 3/4"	8.663 21 1/8"
20"	3'- 0"	0'- 7 3/8"	0'- 0 3/4"	8.815 23 3/8"
24"	3'- 1 3/4"	0'- 6"	0'- 0 7/8"	9.833 27 3/4"
27"	3'- 5 1/4"	0'- 6"	0'- 1 1/8"	10.959 31 1/8"
30"	3'- 8 1/4"	0'- 6"	0'- 1 1/8"	12.196 34 1/2"
33"	3'- 11 3/4"	0'- 6"	0'- 1 3/8"	13.513 38 1/4"
36"	4'- 2 3/4"	0'- 6"	0'- 1 3/8"	14.910

A = WIDTH OF UNSHEETED TRENCH

TABLE OF DIMENSIONS
REINFORCED CONCRETE PIPE

D	A	B	C	VOL. BASE /100' UNSHETTED O. D. BELL
12"	3'- 0"	0'- 10"	0'- 2"	8.319 20 1/8"
15"	3'- 0"	0'- 8 1/4"	0'- 2 1/8"	8.626 24 1/8"
18"	3'- 0"	0'- 6 1/2"	0'- 2 1/2"	8.923 28"
21"	3'- 0 1/2"	0'- 6"	0'- 2 3/4"	9.265 31 7/8"
24"	3'- 6"	0'- 5"	0'- 3"	11.233 35 3/4"
27"	3'- 9 1/2"	0'- 6"	0'- 3 1/4"	12.653
30"	4'- 1"	0'- 6"	0'- 3 1/2"	14.120
33"	4'- 4 1/2"	0'- 6"	0'- 3 3/4"	15.722
36"	4'- 8"	0'- 6"	0'- 4"	17.338
42"	5'- 3"	0'- 6"	0'- 4 1/2"	20.726
48"	5'- 10"	0'- 6"	0'- 5"	24.463
54"	6'- 5"	0'- 6"	0'- 5 1/2"	28.404
60"	7'- 0"	0'- 6"	0'- 6"	32.607
66"	7'- 7"	0'- 6"	0'- 6 1/2"	37.074
72"	8'- 2"	0'- 6"	0'- 7"	41.896
78"	8'- 9"	0'- 6"	0'- 7 1/2"	46.881
84"	9'- 4"	0'- 6"	0'- 8"	52.149
90"	9'- 11"	0'- 6"	0'- 8 1/2"	57.769
96"	10'- 6"	0'- 6"	0'- 9"	63.552

27" IN. THROUGH 96 IN. INCLUSIVE – TONGUE & GROOVE JOINTS

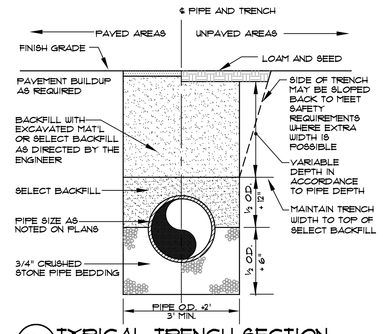

5 TYPICAL TRENCH SECTION
NOT TO SCALE

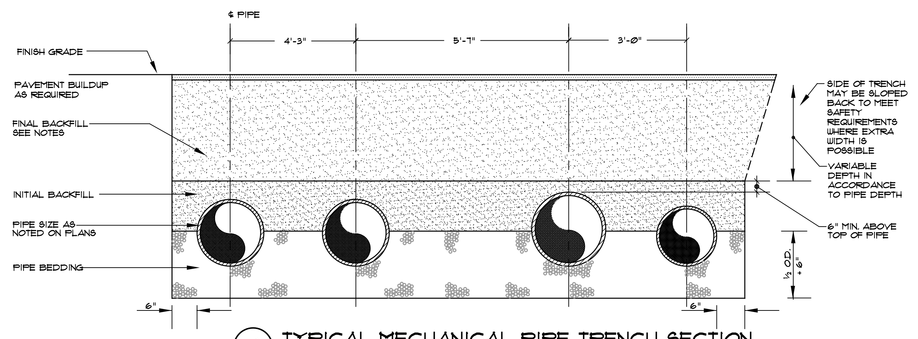

6 TYPICAL MECHANICAL PIPE TRENCH SECTION
NOT TO SCALE

NOTES:

1. ALL EXCAVATION, INSTALLATION AND BACKFILLING OF MECHANICAL PIPING SHALL BE IN STRICT CONFORMANCE WITH MANUFACTURER'S RECOMMENDATIONS.
2. PIPE BEDDING AND INITIAL BACKFILL MATERIAL SHALL BE IN STRICT CONFORMANCE WITH PIPE MANUFACURER'S REQUIREMENTS. BEDDING SHALL CONSIST OF SAND OR A SAND/GRAVEL MIXTURE IN WHICH:
   A. GRAVEL IS PEA GRAVEL OR CRUSHED STONE WITHOUT SHARP EDGES.
   B. PARTICLES NOT LARGER THAN ¾"
   C. 30% PASSING A NO. 4 SIEVE
   D. 30% OF REMAINDER RETAINED BY A NO. 200 SIEVE
3. PIPE BEDDING AND INITIAL BACKFILL SHALL BE PLACED IN 6" MAXIMUM LIFTS AND COMPACTED TO 95% MAXIMUM DENSITY.
4. UNDER PAVED AREAS, INITAL BEDDING SHALL EXTEND TO SUBGRADE ELEVATION OF THE PROPOSED PAVEMENT SUBGRADE.
5. UNDER AREA NOT SUBJECT TO LOADING INITAL BACKFILL SHALL EXTEND A MINIMUM OF 6" ABOVE THE TOP OF PIPE. FINAL BACKFILL SHALL CONSIST OF NATIVE MATERIAL COMPACTED TO 85% MAXIMUM DENSITY.
6. DO NOT COMPACT WITH MECHANICAL EQUIPMENT UNTIL THE CONDUIT IS COVEND WITH A MINIMUM OF 12" OF FIRMLY COMPACTED SOIL.
7. FLOWABLE FILL (SEE SPECIFICATIONS) MAY BE USED IN PLACE OF BEDDING AND INITIAL BACKFILL MATERIAL WITH AUTHORIZATION OF PIPE MANUFACTURER AND ENGINEER.

7 NOT USED
NOT TO SCALE

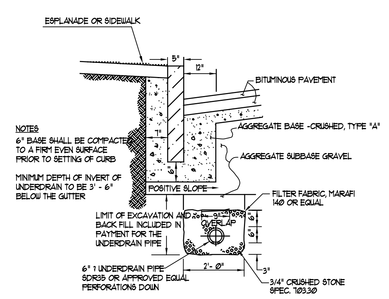

8 TYPE "B" UNDERDRAIN WITH CURB INSTALLATION
NOT TO SCALE

9 NOT USED
NOT TO SCALE

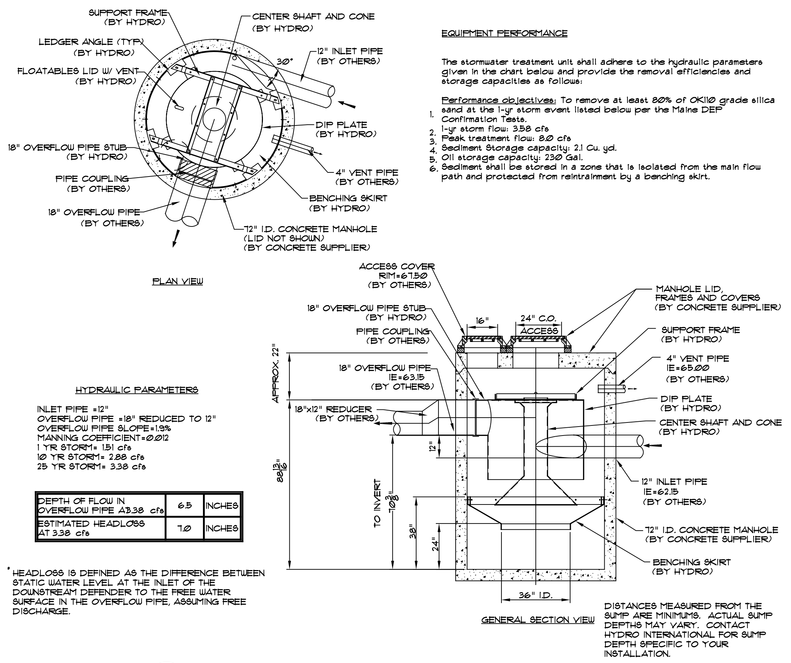

EQUIPMENT PERFORMANCE

The stormwater treatment unit shall adhere to the hydraulic parameters given in the chart below and provide the removal efficiencies and storage capacities as follows:

Performance objectives: To remove at least 80% of OK110 grade silica sand at the 1-yr storm event listed below per the Maine DEP Confirmation Tests.

1. 1-yr storm flow: 3.38 cfs
2. Peak treatment flow: 8.0 cfs
3. Sediment Storage capacity: 21 Cu. yd.
4. Oil storage capacity: 230 Gal.
5. Sediment shall be stored in a zone that is isolated from the main flow path and protected from reinstatment by a benching skirt.

HYDRAULIC PARAMETERS

INLET PIPE =12"
OVERFLOW PIPE =18" REDUCED TO 12"
OVERFLOW PIPE SLOPE=1.5%
MANNING COEFFICIENT=0.012
1 YR STORM= 1.51 cfs
10 YR STORM= 2.88 cfs
25 YR STORM= 3.38 cfs

DEPTH OF FLOW IN OVERFLOW PIPE 43.38 cfs	6.5	INCHES
ESTIMATED HEADLOSS* AT 3.38 cfs	1.0	INCHES

* HEADLOSS IS DEFINED AS THE DIFFERENCE BETWEEN STATIC WATER LEVEL AT THE INLET OF THE DOWNSTREAM DEFENDER TO THE FREE WATER SURFACE IN THE OVERFLOW PIPE, ASSUMING FREE DISCHARGE.

DISTANCES MEASURED FROM THE SUMP ARE MINIMUMS. ACTUAL SUMP DEPTHS MAY VARY. CONTACT HYDRO INTERNATIONAL FOR SUMP DEPTH SPECIFIC TO YOUR INSTALLATION.

10 6FT. DIA. ONLINE DOWNSTREAM DEFENDER
NOT TO SCALE

NOTES:

1. CONTRACTOR SHALL PROVIDE SHOP DRAWINGS FOR REVIEW AND APPROVAL PRIOR TO CONSTRUCTION
2. CONTRACTOR MUST COORDINATE PRODUCTION OF THE UNIT WITH HYDRO INTERNATIONAL

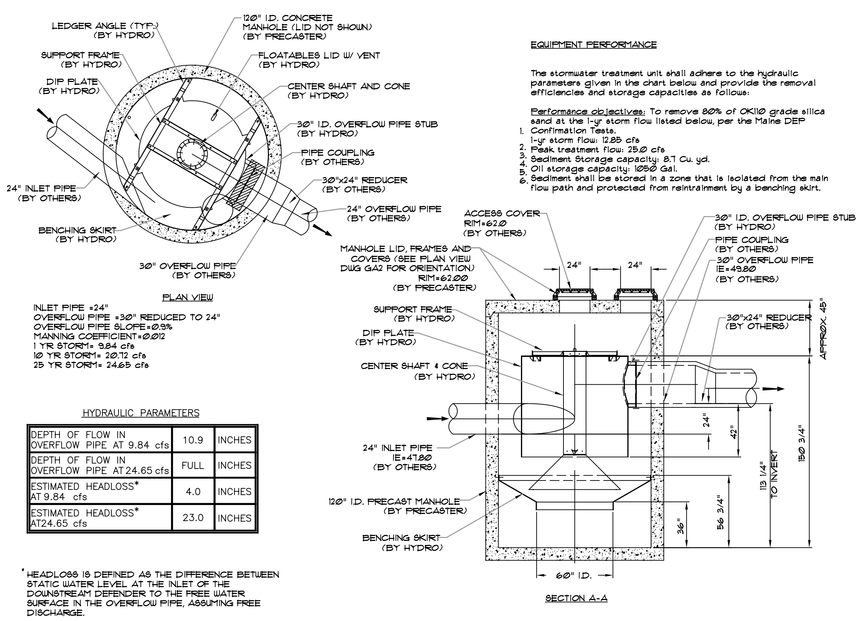

INLET PIPE =24"
OVERFLOW PIPE =36" REDUCED TO 24"
OVERFLOW PIPE SLOPE=0.5%
MANNING COEFFICIENT=0.012
1 YR STORM= 9.84 cfs
10 YR STORM= 20.72 cfs
25 YR STORM= 24.65 cfs

HYDRAULIC PARAMETERS

DEPTH OF FLOW IN OVERFLOW PIPE AT 9.84 cfs	10.9	INCHES
DEPTH OF FLOW IN OVERFLOW PIPE AT 24.65 cfs	FULL	INCHES
ESTIMATED HEADLOSS* AT 9.84 cfs	4.0	INCHES
ESTIMATED HEADLOSS* AT24.65 cfs	23.0	INCHES

* HEADLOSS IS DEFINED AS THE DIFFERENCE BETWEEN STATIC WATER LEVEL AT THE INLET OF THE DOWNSTREAM DEFENDER TO THE FREE WATER SURFACE IN THE OVERFLOW PIPE, ASSUMING FREE DISCHARGE.

11 10FT. DIA. ONLINE DOWNSTREAM DEFENDER
NOT TO SCALE

NOTES:

1. CONTRACTOR SHALL PROVIDE SHOP DRAWINGS FOR REVIEW AND APPROVAL PRIOR TO CONSTRUCTION
2. CONTRACTOR MUST COORDINATE PRODUCTION OF THE UNIT WITH HYDRO INTERNATIONAL

General Notes:

MARK	ISSUE DATE	DESCRIPTION
PERMIT	09/16/04	PERMIT SET
BID	08/31/04	BID SET

Issue Log

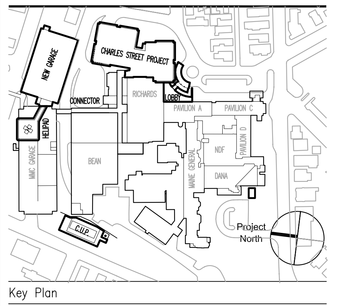

Key Plan

TRO
ARCHITECTURE
PLANNING
ENGINEERING
INTERIOR DESIGN

The Ritchie Organization
80 Bridge Street
Newton, MA 02458-1134
617-969-9400

Maine Medical Center
Pkg C - Site Utitlities
Portland, Maine MMC Project No. 21846

Drawing Title
DETAILS

Commission No.	4677	Date Issued	08/31/04
Scale	AS SHOWN	Sheet Number	PKG-C
Drawn By	FCL		C603
Approved By	DLR		
Filename	01046D4		

Copyright © 2004 The Ritchie Organization