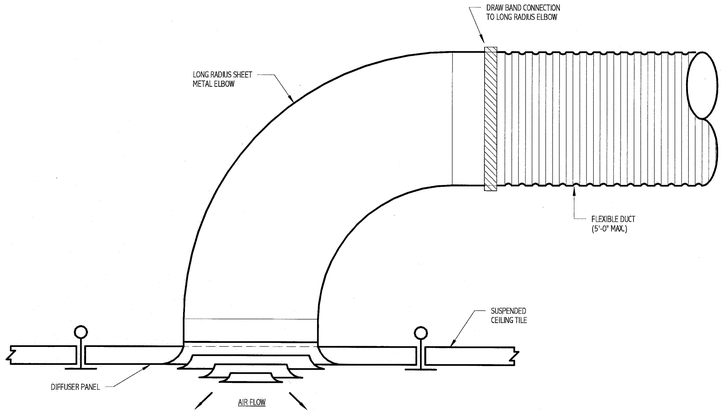

6 FLEXIBLE DUCT
NOT TO SCALE

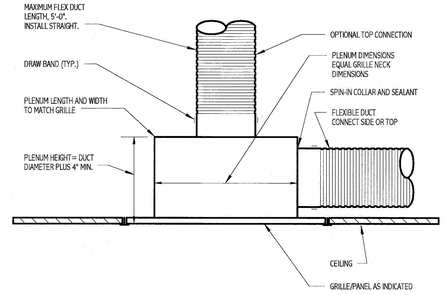

7 TYP. RETURN & TRANFER GRILLE PLENUM
NOT TO SCALE

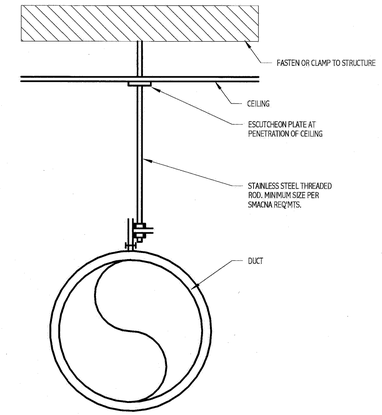

8 DUCT HANGER
NOT TO SCALE

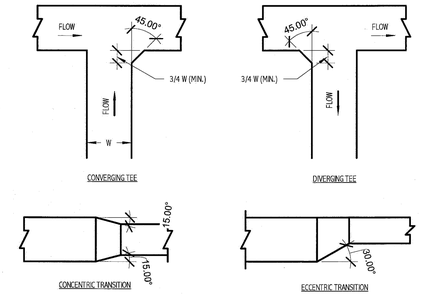

9 DUCT TRANSITION
NOT TO SCALE

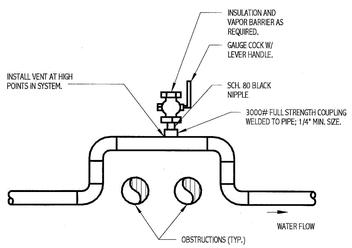

4 HIGH POINT MANUAL AIR VENT DETAIL
DETAIL
NOT TO SCALE

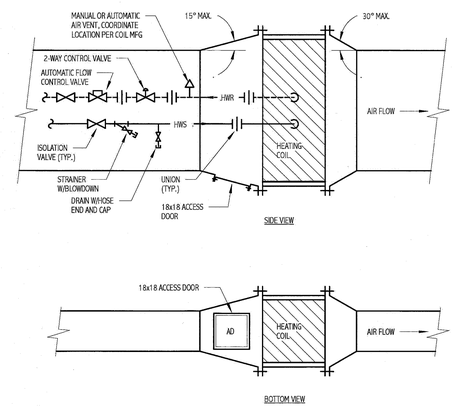

5 DUCT HEATING COIL DETAIL
NOT TO SCALE

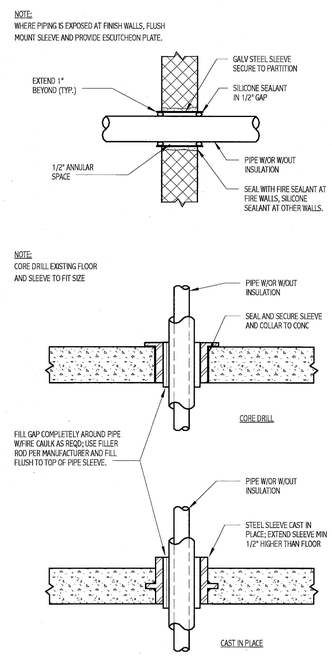

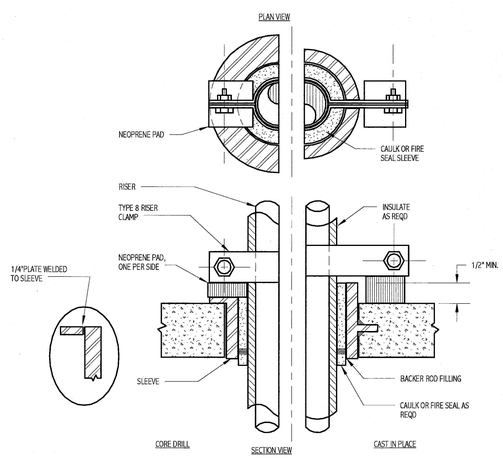

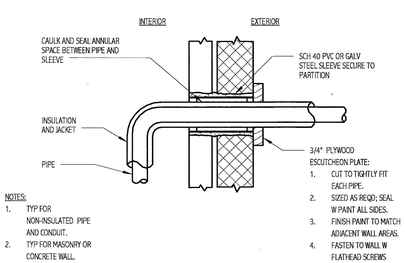

1 PIPE PENETRATION DETAILS
NOT TO SCALE

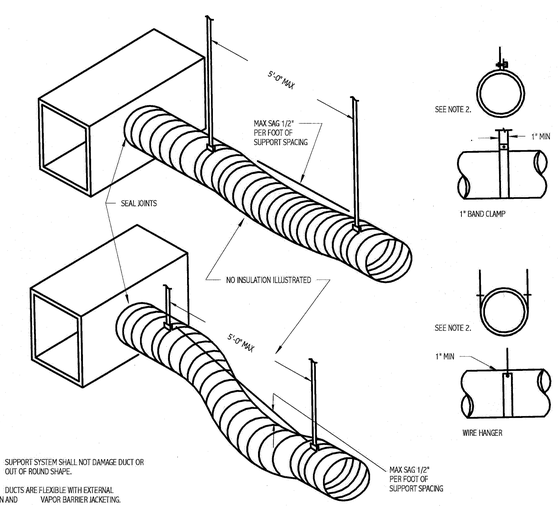

NOTES:
1. SUPPORT SYSTEM SHALL NOT DAMAGE DUCT OR CAUSE OUT OF ROUND SHAPE.
2. DUCTS ARE FLEXIBLE WITH EXTERNAL INSULATION AND VAPOR BARRIER JACKETING.
3. MIN. CENTER LINE BEND RADIUS IS ONE DIA. (OR INSIDE RADIUS OF D/2)

2 STAIGHT SECTION FLEXIBLE DUCT SUPPORT REQUIRMENTS
NOT TO SCALE

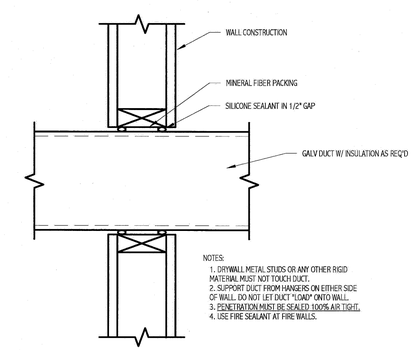

NOTES:
1. DRYWALL METAL STUDS OR ANY OTHER RIGID MATERIAL MUST NOT TOUCH DUCT.
2. SUPPORT DUCT FROM HANGERS ON EITHER SIDE OF WALL. DO NOT LET DUCT "LOAD" ONTO WALL.
3. PENETRATION MUST BE SEALED 100% AIR TIGHT.
4. USE FIRE SEALANT AT FIRE WALLS.

3 METAL DUCT WALL PENETRATION
NOT TO SCALE

144 Fore Street/P.O. Box 618
Portland, Maine 04104
tel. (207) 772-3846
fax. (207) 772-1070
www.smrtinc.com

ARCHITECTURE
ENGINEERING
PLANNING
INTERIOR DESIGN
COMMISSIONING

SMRT

STATE OF MAINE
PETER W. BROWN
No. 5743
LICENSED
PROFESSIONAL ENGINEER
12-21-10

MAINE MEDICAL CENTER
CATH LAB #6
PORTLAND, ME

ISSUED FOR CONSTRUCTION
12-21-10
CURRENT ISSUE STATUS:

REV	DESCRIPTION	DATE
0	ISSUED FOR CONSTRUCTION	12-21-10

GRAPHIC SCALE: 0" 1"

SCALE:	NOT TO SCALE
PROJECT MANAGER:	KD
JC/DRAWN BY:	KPB
A/E OF RECORD:	PWB
PROJECT NO:	10112-00
DATE:	12-21-10

SHEET TITLE:
DETAILS

SHEET No.
M- 501

©COPYRIGHT 2008 SMRT INC.