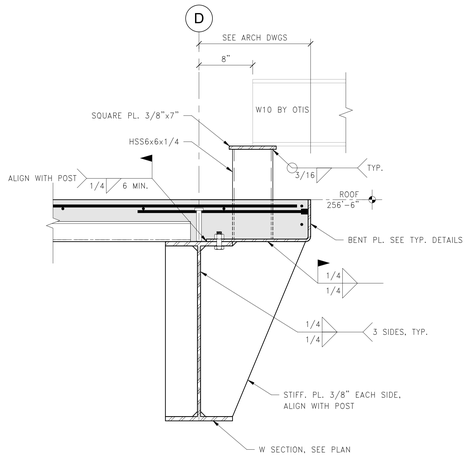

11 SECTION: OFFSET CASSETTE BEAM SUPPORT POST
1 1/2" = 1'-0"

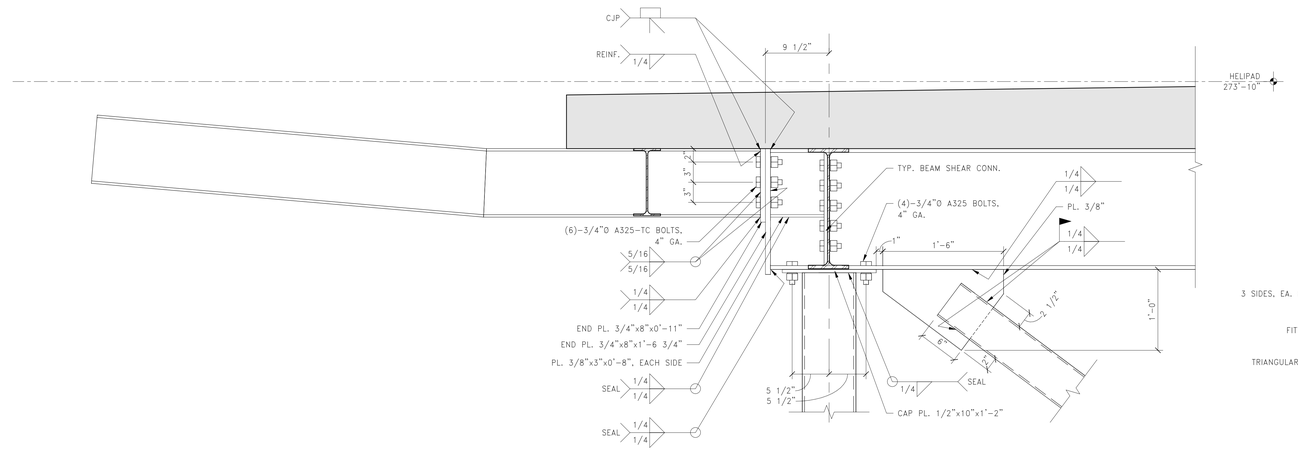

10 SECTION: HELIPAD TAXIWAY OUTRIGGER AT COLUMN DETAIL
1 1/2" = 1'-0"

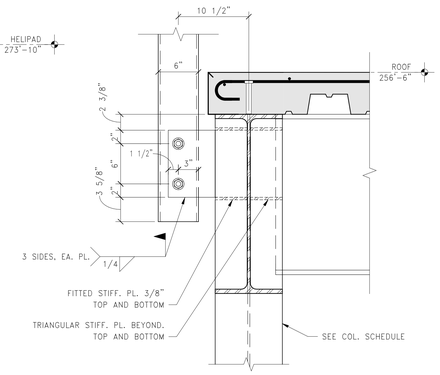

9 SECTION: PARAPET STANCHION CONNECTION TO COLUMN WEB
1 1/2" = 1'-0"

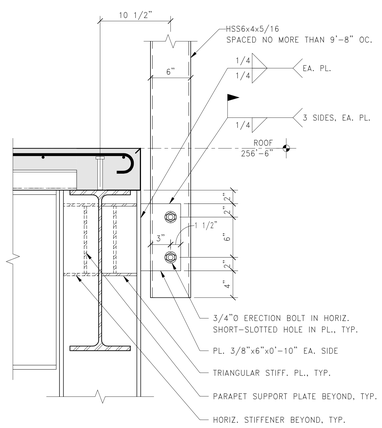

8 SECTION: PARAPET STANCHION CONNECTION TO COLUMN FLANGE
1 1/2" = 1'-0"

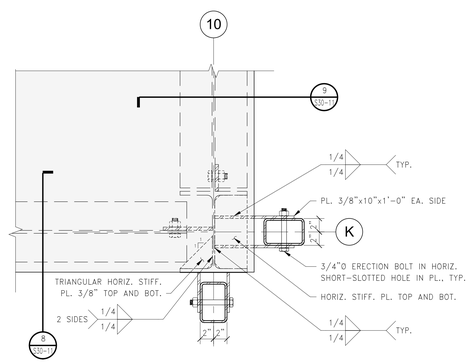

7 PART PLAN: PARAPET STANCHIONS AT WIDE FLANGE COLUMN
1 1/2" = 1'-0"

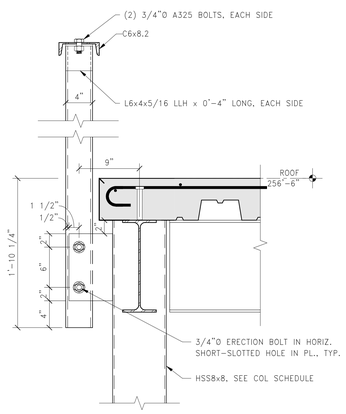

6 SECTION: PARAPET STANCHION CONNECTION TO HSS COLUMN
1 1/2" = 1'-0"

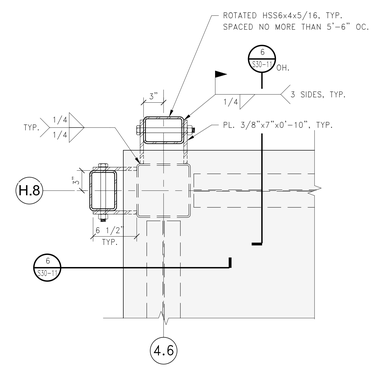

5 PART PLAN: ROTATED PARAPET STANCHIONS AT HSS COLUMN
1 1/2" = 1'-0"

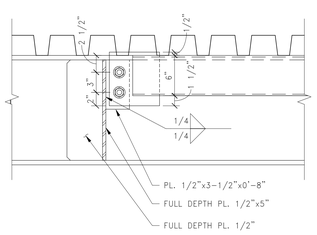

4 SECTION: HSS TO PARAPET GIRT CONNECTION
1 1/2" = 1'-0"

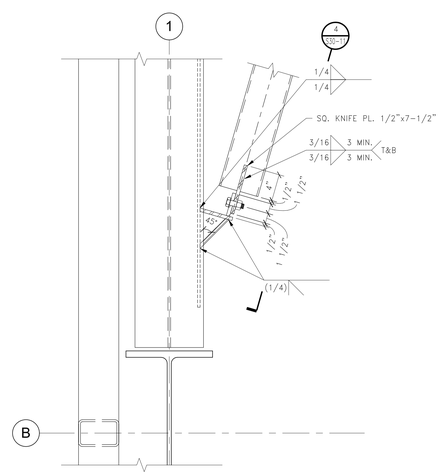

3 PART PLAN: HSS TO PARAPET GIRT CONNECTION
1 1/2" = 1'-0"

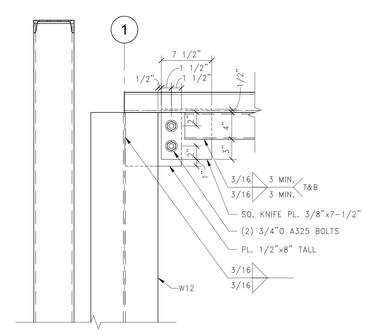

2 SECTION: HSS TO COLUMN CONNECTION OVER RECESSED BAY
1 1/2" = 1'-0"

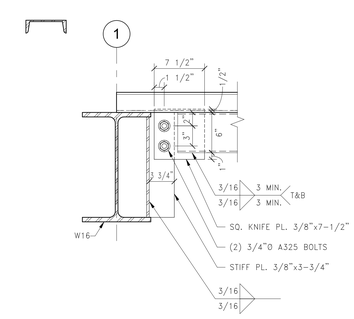

NOTES:
1. SEE DETAIL 5/S30-01 FOR INFORMATION NOW SHOWN HERE.

1 SECTION: PARAPET GIRT OVER RECESSED BAY HSS CONNECTION
1 1/2" = 1'-0"

PERKINS + WILL
225 Franklin Street, Suite 1100
Boston, MA 02110
t 617.478.0300
f 617.478.0321
www.perkinswill.com

CLIENT

Maine Medical Center
MaineHealth

Maine Medical Center
22 Bramhall Street
Portland, ME 04102

CONSULTANTS

CIVIL/ LANDSCAPE ARCHITECT
Segabo Technics
75 John Roberts Road , Suite 1A, South Portland, ME 04106

STRUCTURAL ENG/ BUILDING ENVELOPE CONSULTANT
Simpson Gumpertz & Heger Inc.
41 Seyon Street, Building 1, Suite 500, Waltham, MA 02453

MEPFP ENGINEER/ CODE
AKF Group LLC
99 Bedford Street, 2nd Floor, Boston MA 02111

CONSTRUCTION MANAGER
TURNER CONSTRUCTION
2 Seaport Lane, Suite 200, Boston, MA 02210

ELEVATOR CONSULTANT
VDA (Van Deusen & Associates)
101 Summer Street, 4th Floor, Boston MA 02110

COST ESTIMATOR
D.G.JONES INTERNATIONAL
3 Baldwin Green Common,Suite 202, Woburn, MA 01801

PROJECT TITLE

East Tower 6 & 7 Addition
22 Bramhall Street
Portland, ME 04102

STATE OF MAINE
JOHN H. THOMSEN IV
No. 11120
LICENSED
PROFESSIONAL ENGINEER
3-21-2018

KEY PLANS

PROJECT KEY PLAN

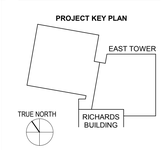

OVERALL KEY PLAN

1 - GILMAN GARAGE
2 - CONGRESS STREET
3 - VISITOR GARAGE
4 - EAST TOWER
5 - CENTRAL UTILITY PLANT
6-BEAN BUILDING
7-RICHARDS BUILDING
8-MAINE GENERAL BUILDING

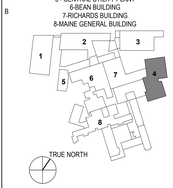

CONSTRUCTION DOCUMENTS
JANUARY 26, 2018

NO	ISSUE	DATE
2	ADDENDUM 2	03.29.18
1	ADDENDUM 1	03.22.18

Job Number	152181.000
Drawn	REE
Checked	BMT
Approved	JHT

TITLE

STEEL DETAILS

SHEET NUMBER

S30-11

Copyright © 2017 Perkins+Will

3/29/2018 9:22:02 AM
I:\BOS\Projects\2015\150093.00-MMC\CD\drawings\Working_Sets_Rev\LOCAL USERS\REEvans\152181-MMC-EAST TOWER-v2017 - STRUCT - REEvans.rvt