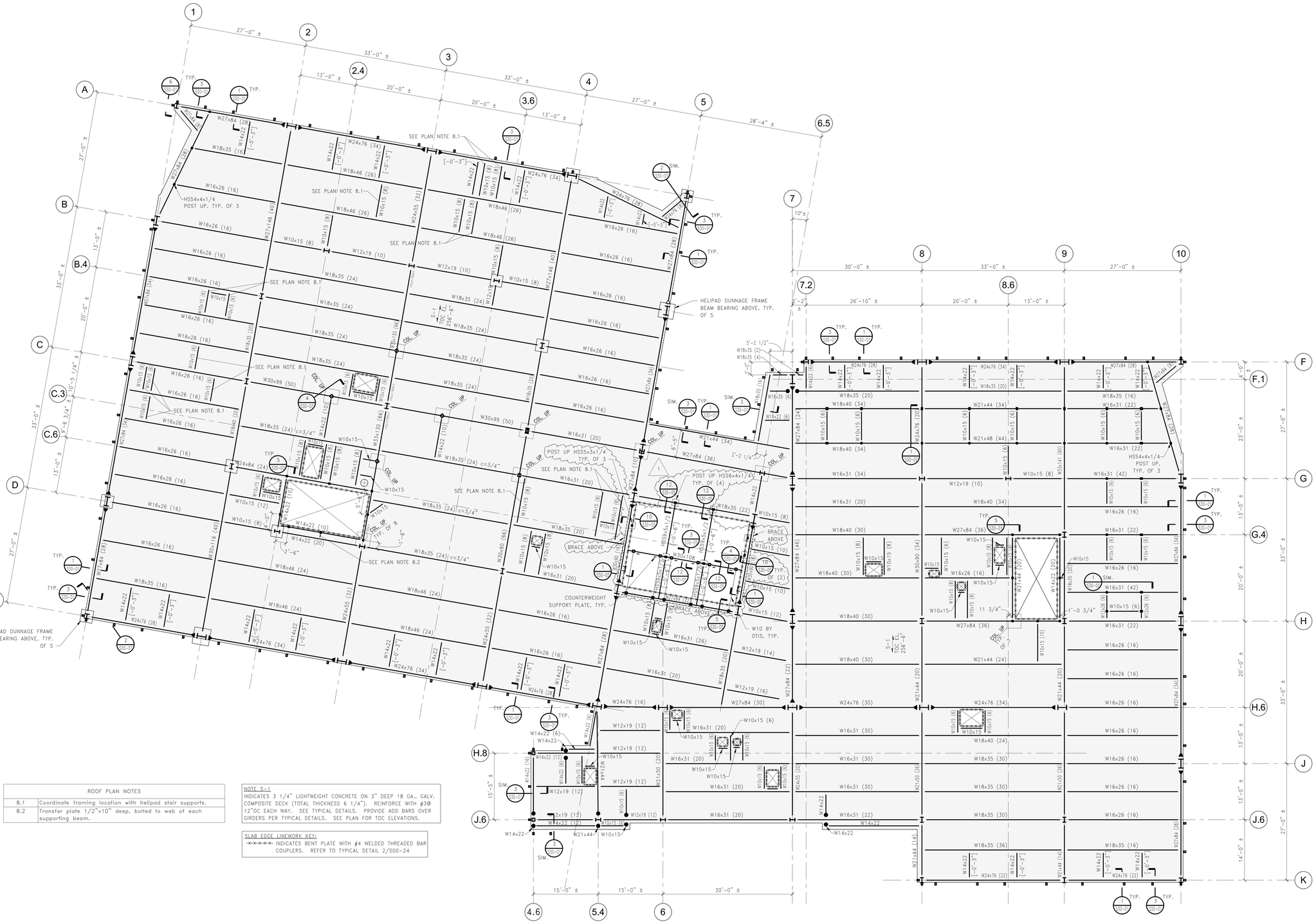

ROOF PLAN NOTES	
8.1	Coordinate framing location with helipad stair supports.
8.2	Transfer plate 1/2"x10" deep, bolted to web of each supporting beam.

NOTE S-1
INDICATES 3 1/4" LIGHTWEIGHT CONCRETE ON 3" DEEP 18 GA., GALV. COMPOSITE DECK (TOTAL THICKNESS 6 1/4"). REINFORCE WITH #3@ 12"OC EACH WAY. SEE TYPICAL DETAILS. PROVIDE ADD BARS OVER GIRDERS PER TYPICAL DETAILS. SEE PLAN FOR TOC ELEVATIONS.

SLAB EDGE LINEWORK KEY:
-x-x-x-x- INDICATES BENT PLATE WITH #4 WELDED THREADED BAR COUPLERS. REFER TO TYPICAL DETAIL 2/S00-24

ROOF FRAMING PLAN

1/8" = 1'-0"

PERKINS + WILL
225 Franklin Street, Suite 1100
Boston, MA 02110
t 617.478.0300
f 617.478.0321
www.perkinswill.com

CLIENT

Maine Medical Center
MaineHealth

Maine Medical Center
22 Bramhall Street
Portland, ME 04102

CONSULTANTS

CIVIL/ LANDSCAPE ARCHITECT
Segabo Technics
75 John Roberts Road , Suite 1A, South Portland, ME 04106

STRUCTURAL ENG/ BUILDING ENVELOPE CONSULTANT
Simpson Gumpertz & Heger Inc.
41 Seyon Street, Building 1, Suite 500, Waltham, MA 02453

MEPFP ENGINEER/ CODE
AKF Group LLC
99 Bedford Street, 2nd Floor, Boston MA 02111

CONSTRUCTION MANAGER
TURNER CONSTRUCTION
2 Seaport Lane, Suite 200, Boston, MA 02210

ELEVATOR CONSULTANT
VDA (Van Deusen & Associates)
101 Summer Street, 4th Floor, Boston MA 02110

COST ESTIMATOR
D.G.JONES INTERNATIONAL
3 Baldwin Green Common,Suite 202, Woburn, MA 01801

PROJECT TITLE

East Tower 6 & 7 Addition
22 Bramhall Street
Portland, ME 04102

KEY PLANS

PROJECT KEY PLAN

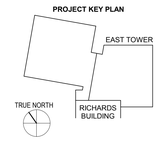

OVERALL KEY PLAN

1 - GILMAN GARAGE
2 - CONGRESS STREET
3 - VISITOR GARAGE
4 - EAST TOWER
5 - CENTRAL UTILITY PLANT
6-BEAN BUILDING
7-RICHARDS BUILDING
8-MAINE GENERAL BUILDING

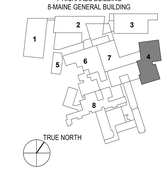

EARLY STRUCTURAL PACKAGE
OCTOBER 20, 2017

NO	ISSUE	DATE

Job Number	152181.000
Drawn	REE
Checked	BMT
Approved	JHT

TITLE

FRAMING PLAN ROOF

SHEET NUMBER

S10-80

Copyright © 2017 Perkins+Will

10/27/2017 11:57:50 AM
I:\BOS\Projects\2015\150093.00-MMC\Drawings\Working_Sets_Revit\LOCAL USERS\REEvans\152181-MMC-EAST TOWER-v2017 - STRUCT - REEvans.rvt

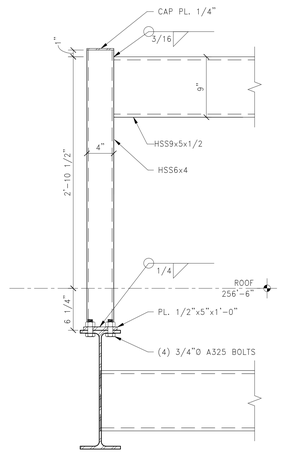

NOTES:
1. FLOOR CONSTRUCTION NOT SHOWN FOR CLARITY, SEE PLAN.

12 SECTION: ELEVATOR DIVIDER BEAM ABOVE ROOF
1 1/2" = 1'-0"

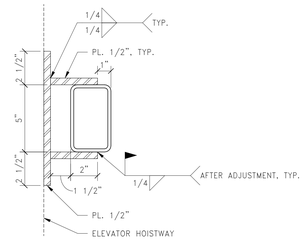

11 SECTION: ELEVATOR GUIDE RAIL SUPPORT PLATE
3" = 1'-0"

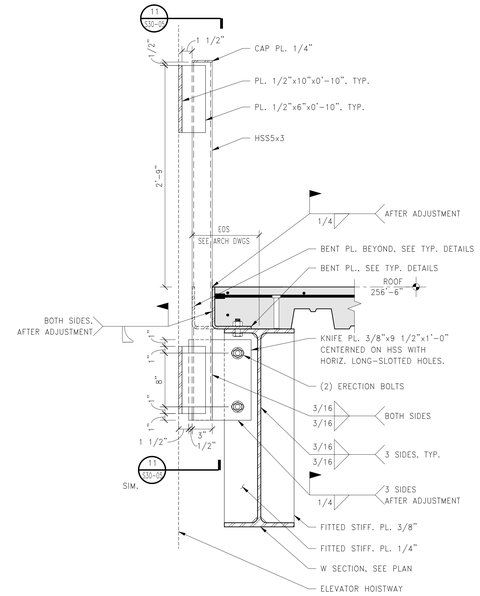

10 SECTION: ELEVATOR GUIDE RAIL SUPPORT ABOVE ROOF
1 1/2" = 1'-0"

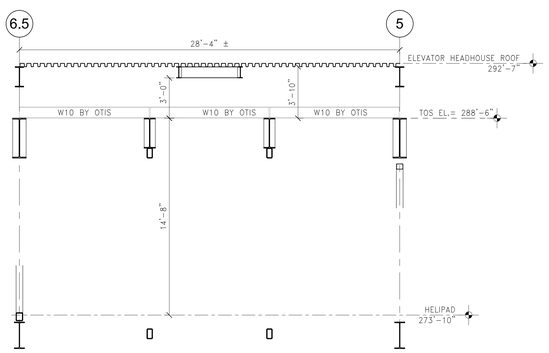

9 SECTION: SERVICE CAR ELEVATOR CLEARANCES
1/4" = 1'-0"

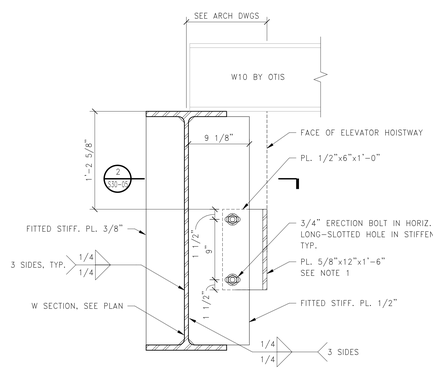

NOTES:
1. FACE OF PLATE SHALL ALIGN WITH FACE OF HOISTWAY AT EACH LEVEL.

8 SECTION: ELEVATOR GUIDE RAIL SUPPORT AT OVERRUN
1 1/2" = 1'-0"

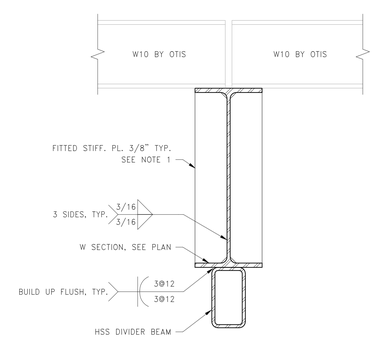

NOTE:
IF REQUIRED, COUNTERWEIGHT / GUIDE RAIL SUPPORT MAY BE INSTALLED SIMILAR TO DETAIL 3/S30-05

7 SECTION: CASSETTE SUPPORT WITH DIVIDER BEAM
1 1/2" = 1'-0"

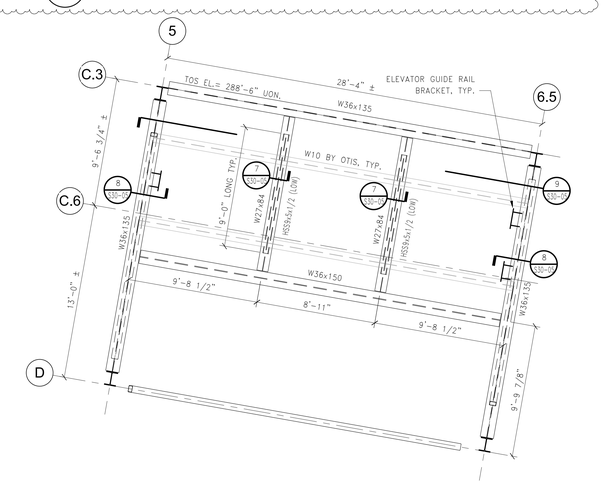

6 PART PLAN: ELEVATOR OVERRUN FRAMING
1/4" = 1'-0"

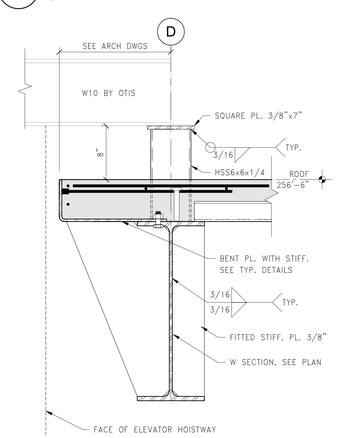

5 SECTION: CASSETTE BEAM AT SLAB
1 1/2" = 1'-0"

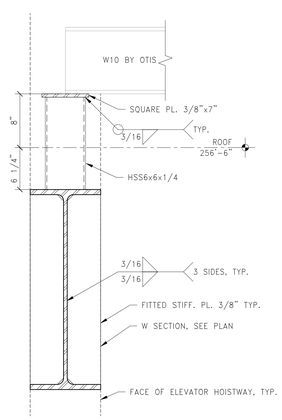

4 SECTION: ELEVATOR CASSETTE BEAM SHIM
1 1/2" = 1'-0"

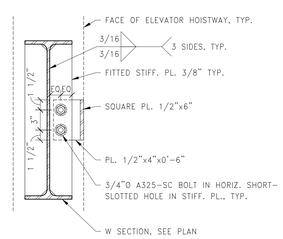

3 SECTION: TYPICAL COUNTERWEIGHT SUPPORT
1 1/2" = 1'-0"

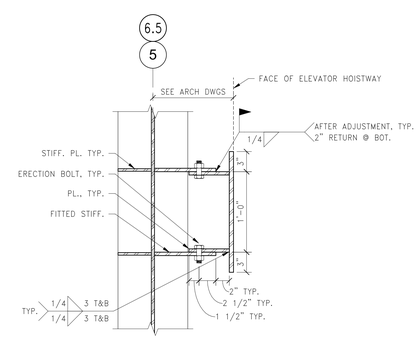

NOTES:
1. FACE OF PLATE SHALL ALIGN WITH FACE OF HOISTWAY AT EACH LEVEL.

2 PLAN DETAIL: TYPICAL ELEVATOR GUIDE RAIL SUPPORT
1 1/2" = 1'-0"

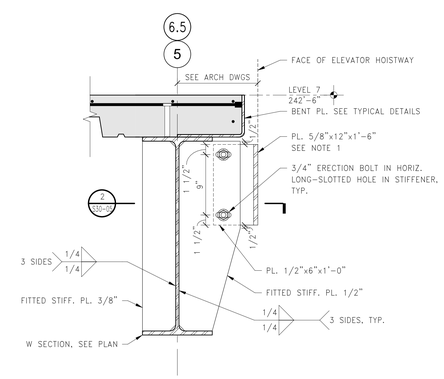

NOTES:
1. FACE OF PLATE SHALL ALIGN WITH FACE OF HOISTWAY AT EACH LEVEL.

1 SECTION: TYPICAL ELEVATOR GUIDE RAIL SUPPORT
1 1/2" = 1'-0"

PERKINS + WILL
225 Franklin Street, Suite 1100
Boston, MA 02110
t 617.478.0300
f 617.478.0321
www.perkinswill.com

CLIENT

Maine Medical Center
MaineHealth

Maine Medical Center
22 Bramhall Street
Portland, ME 04102

CONSULTANTS

CIVIL/ LANDSCAPE ARCHITECT
Segabo Technics
75 John Roberts Road , Suite 1A, South Portland, ME 04106

STRUCTURAL ENG/ BUILDING ENVELOPE CONSULTANT
Simpson Gumpertz & Heger Inc.
41 Seyon Street, Building 1, Suite 500, Waltham, MA 02453

MEPFP ENGINEER/ CODE
AKF Group LLC
99 Bedford Street, 2nd Floor, Boston MA 02111

CONSTRUCTION MANAGER
TURNER CONSTRUCTION
2 Seaport Lane, Suite 200, Boston, MA 02210

ELEVATOR CONSULTANT
VDA (Van Deusen & Associates)
101 Summer Street, 4th Floor, Boston MA 02110

COST ESTIMATOR
D.G.JONES INTERNATIONAL
3 Baldwin Green Common,Suite 202, Woburn, MA 01801

PROJECT TITLE

East Tower 6 & 7 Addition
22 Bramhall Street
Portland, ME 04102

KEY PLANS

PROJECT KEY PLAN

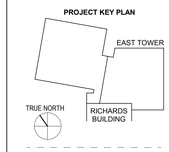

OVERALL KEY PLAN

1 - GILMAN GARAGE
2 - CONGRESS STREET
3 - VISITOR GARAGE
4 - EAST TOWER
5 - CENTRAL UTILITY PLANT
6-BEAN BUILDING
7-RICHARDS BUILDING
8-MAINE GENERAL BUILDING

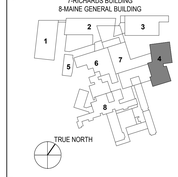

EARLY STRUCTURAL PACKAGE
OCTOBER 20, 2017

NO	ISSUE	DATE

Job Number	152181.000
Drawn	REE
Checked	BMT
Approved	JHT

TITLE

STEEL DETAILS

SHEET NUMBER

S30-05

Copyright © 2017 Perkins+Will

10/27/2017 11:57:53 AM
I:\BOS\Projects\2015\150093.00-MMC\ZD\drawings\Working_Sqft_Revit\LOCAL USERS\REE\eanis152181-MMC-EAST TOWER-v2017 - STRUCT - REE.rvt