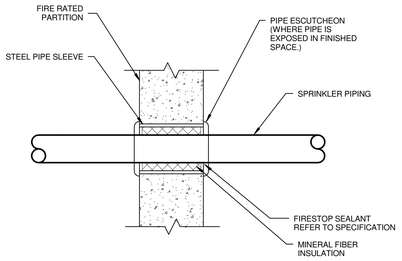

PIPE PENETRATION THRU FIRE RATED/SMOKE RATED ASSEMBLY — NO SCALE — 210529-01

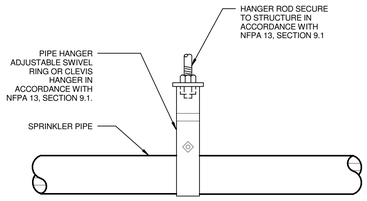

NOTE: HANGER SPACING IN ACCORDANCE WITH NFPA 13. PROVIDE SEISMIC BRACING AS REQUIRED.

PIPE HANGER DIAGRAM — NO SCALE — 210529-01

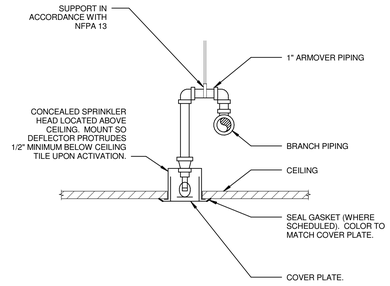

CONCEALED SPRINKLER PIPING DETAIL — NO SCALE — 211313-03

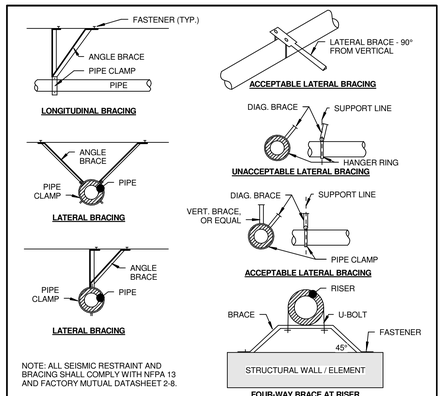

NOTE: ALL SEISMIC RESTRAINT AND BRACING SHALL COMPLY WITH NFPA 13 AND FACTORY MUTUAL DATASHEET 2-8.

SEISMIC RESTRAINT AND BRACING — NO SCALE — 210999-01

e4h ENVIRONMENTS FOR HEALTH ARCHITECTURE
183 Middle Street, Portland, ME 04101
888.781.8441 207.773.8841
BOSTON | DALLAS | NEW YORK | BURLINGTON | PORTLAND
e4harchitecture.com

©2017 Environments For Health

FITZEMEYER & TOCCI ASSOCIATES, INC.
300 Unicorn Park Drive, 5th Floor
Woburn, MA 01801
(P) 781.481.0210 (F) 781.481.0203
(W) www.f-t.com
F&T # 170066.01

Key Plan

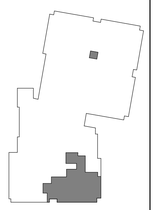

Project North

Maine Medical Center
LEVEL 2 OR RENOVATION
22 Bramhall Street, Portland, ME

REV	DESCRIPTION	DATE
	PERMIT SET	7.27.2017

STATE OF MAINE
SCOTT E. LECLAIR
No. 11519
PROFESSIONAL ENGINEER

SEAL:

PROJECT NUMBER: 2017009

DATE: 07/27/2017

SHEET TITLE AND NUMBER:

F300

FIRE PROTECTION DETAILS