SCHEDULES

P - PLUMBING FIXTURE SCHEDULE

TAG	DESCRIPTION	MFR.	MODEL	ADA (Y/N)	PIPE CONNECTION SIZE				PRESSURE		FLOW CONTROL	FIXTURE UNITS			FAUCET / VALVE	MOUNTING			REMARKS
					CW	HW	W	V	MIN	MAX		CW	HW	W		WALL	FLOOR	COUNTER	
LAV-1	LAVATORY	ACORN	1652-EG-FALRB-BPH-04-M	Y	1/2"	1/2"	2"	1 1/2"	20	80	0.5 GPM	1	1	1	ACORN -AIR CONTROL METERING	X			PROVIDE WITH STOPS & SUPPLIES, SECURED KNEE SHROUD.
SK-1	HANDWASH SINK	ACORN	1652-EG-FALRB-BPH-04-M	Y	1/2"	1/2"	2"	1 1/2"	8	80	0.5 GPM	1	1	1	ACORN -AIR CONTROL METERING	X			PROVIDE WITH STOPS & SUPPLIES, SECURED KNEE SHROUD.
WC-1	WATER CLOSET	ACORN	3335-W-2-EG	Y	1"	0"	4"	2"	25	80	1.28 GPF	12	1	6	SLOAN 9603-1.28-MBPM		X		PROVIDE WITH WB-1-A WALL BOX.

DETAILS

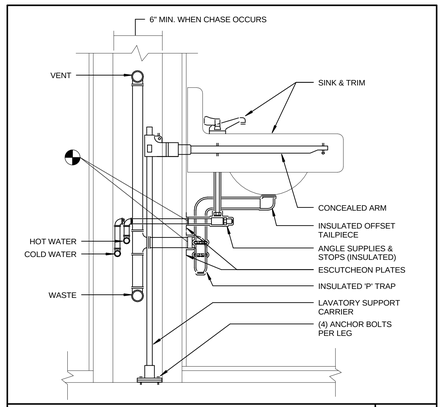

WALL HUNG SINK DIAGRAM — NO SCALE — 224216-03

ABBREVIATIONS

AC	AIR CHAMBER
AVTR	ACID VENT THROUGH ROOF
B.F.D.	BACK FLOW PREVENTER
CI	CAST IRON
CD	CEILING DIFFUSER
CFH	CUBIC FEET PER HOUR
C.L.D.I.	CEMENT LINED DUCTILE IRON
CONTR	CONTRACTOR
CWR	COLD WATER RISER
DN	DOWN
D. & R.	DISCONNECT AND REMOVE
DWG	DRAWING
EA.	EACH
E.T.R.	EXISTING TO REMAIN
EAT	ENTERING AIR TEMPERATURE
EX.	EXISTING
F.B.O.C.	FURNISHED BY OTHER CONTRACTOR
FT	FEET
GAL	GALLONS
GC	GENERAL CONTRACTOR
GPM	GALLONS PER MINUTE
HP	HORSE POWER
HVAC	HEATING, VENTILATION AND AIR CONDITIONING
HWR	HOT WATER RISER
INV.	INVERT
IN	INCHES
KW	KILOWATTS
NIC	NOT IN CONTRACT
NTS	NOT TO SCALE
O.E.D.&T.	OPEN END DRAIN AND TRAP
O.S.&Y.	OUTSIDE SCREW AND YOKE
PC	PLUMBING CONTRACTOR
PSI	POUNDS PER SQUARE INCH
RM	ROOM
SA	SHOCK ABSORBER
SF	SQUARE FEET
SPD	SPEED
SS	STAINLESS STEEL
TYP	TYPICAL
WS	WASTE STACK
VB	VACUUM BREAKER
V.T.R.	VENT THROUGH ROOF
V.C.	VITRIFIED CLAY

SELECTIVE DEMOLTION NOTES

1. CONTRACTOR SHALL VISIT SITE AND IDENTIFY EXISTING CONDITIONS AND DIFFICULTIES THAT WILL AFFECT WORK OF THIS SECTION. NO COMPENSATION WILL BE GRANTED FOR ADDITIONAL WORK CAUSED BY UNFAMILIARITY WITH SITE CONDITIONS THAT ARE VISIBLE OR READILY CONSTRUED BY EXPERIENCED OBSERVERS.
2. PRIOR TO COMMENCING WORK OF THIS SECTION, EXAMINE SITE AND CONDITIONS UNDER WHICH WORK WILL BE PERFORMED. DETERMINE EXACT LOCATIONS OF EXISTING EQUIPMENT, PIPING AND CONTROLS. REPORT TO OWNER ANY CONDITIONS THAT MIGHT ADVERSELY AFFECT WORK. COMMENCEMENT OF WORK SHALL BE CONSTRUED AS COMPLETE ACCEPTANCE OF EXISTING CONDITIONS AND PREPARATORY WORK.
3. ABANDONING OF FIXTURES, CARRIERS, PIPING OR EQUIPMENT IN PLACE SHALL NOT BE ALLOWED. COMPLETE REMOVAL REQUIRED UNLESS NOTED OTHERWISE.
4. PIPING TO BE REMOVED: REMOVE PORTION OF PIPING INDICATED TO BE REMOVED, PROVIDE FULL PORT BALL VALVE AND CAP REMAINING PIPING WITH SAME OR COMPATIBLE PIPING MATERIAL.
5. FIXTURES TO BE REMOVED: REMOVE FIXTURES AND ALL ASSOCIATED ACCESSORIES INCLUDING BUT NOT LIMITED TOO, CARRIERS, SUPPORTS, PIPING, FLANGES, OTHER MOUNTING ACCESSORIES AND ETC.
6. EQUIPMENT TO BE REMOVED: DISCONNECT AND REMOVE EQUIPMENT. ALL UNUSED SERVICES CONNECTED TO DEMOLISHED EQUIPMENT SHALL BE REMOVED BACK TO UNUSED PORTION AND SERVICES CAPPED.
7. EQUIPMENT TO BE REMOVED AND SALVAGED: DISCONNECT AND CAP SERVICES, REMOVE EQUIPMENT AND DELIVER TO OWNER. ALL UNUSED PORTIONS SHALL BE DEMOLISHED AS INDICATED WITHIN THESE DOCUMENTS.
8. COMPLY WITH ALL STATE AND LOCAL CODES AS TO REMOVAL AND DISPOSAL OF EQUIPMENT REMOVED FROM THE SITE.
9. COMPLY WITH GOVERNING EPA NOTIFICATION REGULATIONS BEFORE BEGINNING SELECTIVE DEMOLITION.
10. REMOVE PREVIOUSLY ABANDONED WORK IN THE WAY OF EXISTING CONSTRUCTION, OR AS NOTED.
11. COMPLY WITH HAULING AND DISPOSAL REGULATIONS OF AUTHORITIES HAVING JURISDICTION.
12. COMPLY WITH ANSI A10.6 (SAFETY REQUIREMENTS FOR DEMOLITION OPERATIONS) AND NFPA 241 (STANDARD FOR SAFEGUARDING CONSTRUCTION, ALTERATION AND DEMOLITION OPERATIONS)
13. PERMITS: GIVE ALL REQUIRED NOTICES, FILE ALL REQUIRED PLANS AND SPECIFICATIONS RELATING TO THE WORK OF THIS SECTION WITH THE PROPER AUTHORITIES AND PAY FOR ANY REQUIRED PERMITS.
14. ALL EQUIPMENT AND SYSTEMS TO BE REMOVED OR DEMOLISHED UNDER THIS SECTION AND NOT DESIRED BY OWNER SHALL BECOME THE PROPERTY OF THE CONTRACTOR. THE CONTRACTOR SHALL REMOVE ALL SUCH EQUIPMENT FROM THE SITE PROMPTLY AFTER DETACHMENT FROM BUILDING STRUCTURE.
15. STORAGE OR SALE OF REMOVED ITEMS OR MATERIALS ON-SITE IS NOT PERMITTED.
16. IT IS UNKNOWN WHETHER HAZARDOUS MATERIALS WILL BE ENCOUNTERED IN THE WORK. IF MATERIALS SUSPECTED OF CONTAINING HAZARDOUS MATERIALS ARE ENCOUNTERED, DO NOT DISTURB. IMMEDIATELY NOTIFY ARCHITECT AND OWNER.
17. EXISTING PIPING SHOWN ON DRAWINGS DOES NOT INDICATE FULL EXTENT OF PIPING DEMOLITION. FIELD VERIFICATIONS REQUIRED.
18. HOT WATER RECIRCULATION SYSTEM SHALL BE BALANCE TESTED BEFORE DEMOLITION WORK BEGINS. CONTRACTOR IS RESPONSIBLE FOR SETTING A BASELINE TO ADHERE TO AFTER NEW CONSTRUCTION. FAILURE TO ESTABLISH A BASELINE WILL REQUIRE THE NEW SYSTEM TO BE BALANCED AND ACHIEVE A STANDARD ACCEPTABLE TO THE OWNER AND ENGINEER.
19. MEDICAL GAS SYSTEMS SHALL BE DEMOLISHED IN ACCORDANCE WITH NFPA 99 AND FGI GUIDELINES.
20. FIXTURES EXISTING TO REMAIN: FIXTURES SHALL BE PROTECTED DURING DEMOLITION. FIXTURES DAMAGED DURING DEMOLITION SHALL BE REPAIRED TO LIKE NEW WORKING CONDITION OR REPLACED WITH SAME FIXTURE. WHERE SAME FIXTURE IS NO LONGER AVAILABLE AN APPROVED EQUAL BY OWNER AND ENGINEER SHALL BE USED. ALL WORK SHALL BE PERFORMED AT NO COST TO OWNER.

VALVE LEGEND

IS	ISOLATION VALVE REFER TO DETAILS AND SPEC.
GV	GATE VALVE
GLV	GLOBE VALVE
BLV	BALL VALVE
BFV	BUTTERFLY VALVE
DV	DRAIN VALVE
SCV	SWING CHECK VALVE
LCV	LIFT CHECK VALVE
BV	BALANCE VALVE
PRV	PRESSURE REDUCING VALVE
RV	RELIEF VALVE
TMV	THERMOSTATIC MIXING VALVE
	UNION
FLG	FLANGE
PLS	PIPE LINE STRAINER
BKS	BASKET STRAINER
TRM	THERMOMETER
PG	PRESSURE GAUGE
FSW	FLOW SWITCH
AN	PIPE ANCHOR
GD	PIPE GUIDE
EC	EXPANSION COMPENSATOR
PFC	PIPE FLEXIBLE CONNECTION
PT	PRESSURE/TEMPERATURE PLUG
	PIPE CAP
	STRAINER WITH DRAIN VALVE AND CAP

DRAWING NOTES

1	DEMOLITION NOTE
1	NEW WORK NOTE
	CONNECT TO EXISTING
	CAP EXISTING
	LIMIT OF DEMOLITION
1	DRAWING REVISION DESIGNATION
	REVISION CLOUD
	ELECTRICAL AREA - THE AREA INDICATED IS AN ELECTRICAL ZONE. DUCTWORK, PIPING, AND SYSTEMS SHALL NOT RUN THROUGH THIS ZONE. EXCEPTION:PIPES, DUCTS, AND EQUIPMENT DEDICATED TO SERVE THE ZONE ARE ALLOWED. COORDINATE WITH ELECTRICAL CONTRACTOR AND COMPLY WITH ALL CODE CLEARANCE REQUIREMENTS.

GENERAL NOTES

1. PIPE ROUTING IS SHOWN DIAGRAMMATICALLY ON PLUMBING DRAWINGS AND SHALL BE ADJUSTED FOR ARCHITECTURAL, STRUCTURAL, MECHANICAL AND ELECTRICAL CLEARANCES AND LIMITATIONS AND FOR EQUIPMENT SELECTION. FURNISH AND INSTALL ALL ELEMENTS REQUIRED TO COMPLETE INTENDED PIPING SYSTEMS WHETHER OR NOT THESE ELEMENTS ARE SPECIFICALLY SHOWN ON DRAWINGS OR CALLED FOR IN SPECIFICATIONS.
2. CONSULT ALL DRAWINGS, NOTE ARCHITECTURAL DETAILS AND ALL CONDITIONS THAT MAY AFFECT THE WORK AND CARE FOR SAME, WHILE EXECUTING THE WORK UNDER THIS SECTION. COOPERATE AND COORDINATE WITH THE ARCHITECT, ALL OTHER TRADES, BLDG. MANAGEMENT, AND THE OWNER.
3. ALL WORK SHALL CONFORM TO ALL APPLICABLE FEDERAL, STATE, AND LOCAL CODES AND REGULATIONS.
4. IN EVENT OF CONFLICT BETWEEN OR AMONG SPECIFIED REQUIREMENTS AND PERTINENT CODES OR REGULATIONS, MORE STRINGENT REQUIREMENTS SHALL GOVERN.
5. TAKE ALL MEASURES REQUIRED TO PROTECT OWNER'S PROPERTY AND EQUIPMENT DURING COURSE OF WORK. SHOULD DAMAGE TO OWNER'S PROPERTY OR EQUIPMENT OCCUR, REPAIR DAMAGE PROMPTLY AT NO COST TO OWNER.
6. INSTALL ALL EQUIPMENT AND MATERIALS IN STRICT CONFORMANCE WITH EQUIPMENT AND MATERIALS MANUFACTURERS' WRITTEN RECOMMENDATIONS.
7. LOCATIONS, PLUMBING MOUNTING HEIGHTS, AND DETAILS SHOWN ON ARCHITECTURAL DRAWINGS TAKE PRECEDENCE OVER SAME SHOWN ON PLUMBING DRAWINGS AND DESCRIBED IN SECTIONS OF THE SPECIFICATIONS. WHEN ARCHITECTURAL DRAWINGS DO NOT SHOW PRECISE LOCATIONS OF DEVICES OR EQUIPMENT, LOCATE AS DIRECTED BY THE ARCHITECT.
8. LOCATE PIPES TO FALL WITHIN PARTITIONS, WALLS, OR ROOF CAVITIES AND TO PRECLUDE FURRING, OTHER THAN THAT SHOWN ON ARCHITECTURAL DRAWINGS.
9. ALL PLUMBING EQUIPMENT, VALVES, ETC. SHALL BE INSTALLED WITH CLEARANCE FOR SERVICING AS RECOMMENDED BY THE MANUFACTURER.
10. REFER TO SCHEDULES AND SPECIFICATIONS FOR PLUMBING FIXTURES AND EQUIPMENT REQUIRING LOW VOLTAGE. COORDINATE ALL LOW VOLTAGE REQUIREMENTS, INCLUDING ALARMS, WITH CONTROLS CONTRACTOR.
11. REFER TO SCHEDULES AND SPECIFICATIONS FOR PLUMBING FIXTURES AND EQUIPMENT REQUIRING ELECTRICAL POWER. COORDINATE ALL POWER REQUIREMENTS WITH ELECTRICAL CONTRACTOR.

DEMOLITION LEGEND

"X"	EXISTING PLUMBING FIXTURE, EQUIPMENT OR SYSTEM TO BE SELECTIVELY DEMOLISHED
"XR"	EXISTING PLUMBING FIXTURE, EQUIPMENT OR SYSTEM TO BE REMOVED, STORED AND RELOCATED
"XT"	EXISTING PLUMBING FIXTURE, EQUIPMENT OR SYSTEM TO BE REMOVED AND TURNED OVER TO OWNER FOR REUSE.
"XN"	NEW LOCATION OF EXISTING RELOCATED PLUMBING FIXTURE OR EQUIPMENT
"E"	EXISTING PLUMBING FIXTURE, EQUIPMENT OR SYSTEM TO REMAIN

EXAMPLE

X XR XT XN E

PLUMBING EQUIPMENT COORDINATION

- PLUMBING CONTRACTOR SHALL REFER TO THE ARCHITECTURAL, FIRE PROTECTION, MECHANICAL, AND ELECTRICAL DRAWINGS AND SPECIFICATIONS FOR LOCATIONS AND QUANTITIES OF EQUIPMENT RELEASED TO EACH TRADE.

PIPING LEGEND

CW	COLD WATER
HW	HOT WATER
HWC	HOT WATER CIRCULATION
T	TEMPERED WATER
D	DW DISTILLED WATER
DI	DIW DEIONIZED WATER
RO	RO REVERSE OSMOSIS
G	G GAS
MA	MA MEDICAL COMPRESSED AIR
MV	MV MEDICAL VACUUM
VCL	VCL VACUUM CLEANING
TP	TP TRAP PRIMER
SW	SW SPECIAL WASTE
SW	SW SPECIAL WASTE - BELOW FLOOR
SV	SV SPECIAL VENT
SV	SV SPECIAL VENT - BELOW FLOOR
O	OX OXYGEN
NO	NO NITROUS OXIDE
OS	OS ORAL SUCTION
	S. OR W. SANITARY OR WASTE
	V. VENT
SD	SD STORM DRAIN
	V. VENT - BELOW FLOOR
	SB OR WB SANITARY OR WASTE - BELOW FLOOR
SD	SD STORM DRAIN - BELOW FLOOR
IW	IW INDIRECT WASTE
FM	FM FORCED MAIN
GS	GS GLYCOL SUPPLY
	PIPING TO BE REMOVED
	EXISTING PIPING TO REMAIN
	SLB SLEEVE BEAM
	RUN-OUT OFF TOP
	RUN-OUT OFF BOTTOM
	PIPE UP
	PIPE DOWN
	CAP ON END OF PIPE
	PIPE BREAK
	C.T.E. CONNECT TO EXISTING
	W. & T. WASTE AND TRAP
SW	SW. & T. SPECIAL WASTE AND TRAP
	C.O. CLEANOUT
	D.C.O. DANDY CLEANOUT
	F.C.O. FLOOR CLEANOUT
	W.C.O. WALL CLEANOUT
	W.H. WALL HYDRANT
	DIRECTION OF FLOW
	DIRECTION OF PITCH DOWN
	FD FLOOR DRAIN
	RD ROOF DRAIN
	AD AREA DRAIN
	PD PLANTER DRAIN
	TB THRUST BLOCK

PLUMBING DRAWING LIST

DWG NO.	DRAWING TITLE
P0.0	PLUMBING LEGEND, DETAILS AND SCHEDULES
P1.0	PLUMBING FIRST FLOOR PLAN

morris switzer
environments for health

Williston, Vermont
Boston, Massachusetts
Portland, Maine

183 Middle Street
Portland, ME 04101
t 207.773.8841
f 207.773.8840

© 2014 MorrisSwitzer

morrisswitzer.com

STATE OF MAINE
SCOTT E. LECLAIR
No. 11519
PROFESSIONAL ENGINEER

Seals

Consultant

DD Approval Signature — Date

Project North

Key Plan N.T.S.

Revision	Date	No
Issued For Construction		

Portland, Maine

Psych Room Renovation

MorrisSwitzer Project Number	201451
Date	1/27/2017
Scale	12" = 1'-0"

Sheet Title and Number

PLUMBING LEGEND, DETAILS AND SCHEDULES

P0.0

D:\RevitProjects2014\140117 - MMC PSYCH RENo central.rvt

4/7/2017 5:03:05 PM