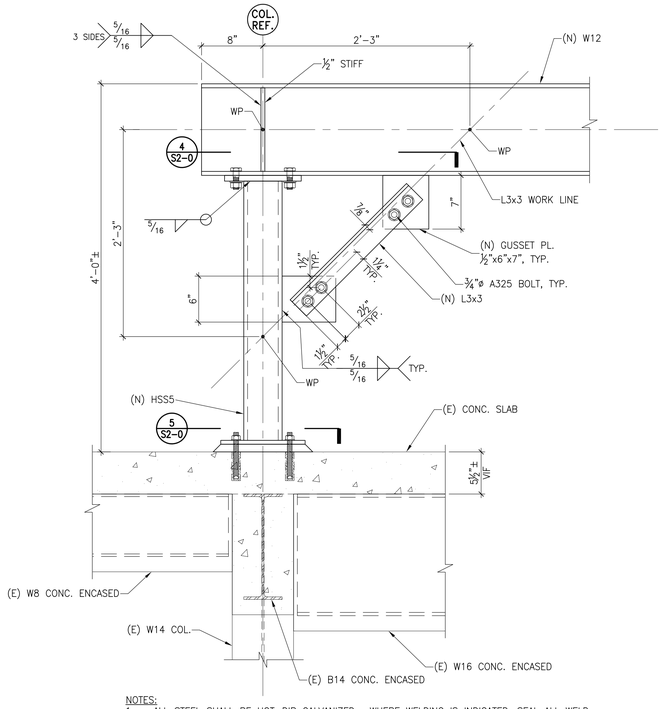

NOTES:
1. ALL STEEL SHALL BE HOT-DIP GALVANIZED. WHERE WELDING IS INDICATED, SEAL ALL WELD SEAMS. PROVIDE VENT HOLES IN POST CAP AND BASE PLATES.
2. HEADED STUDS ON (E) BEAM FLANGES ARE NOT SHOWN.

1 FRAMING DETAIL: TYP. POST AND KNEE BRACE

1 1/2" = 1'-0"

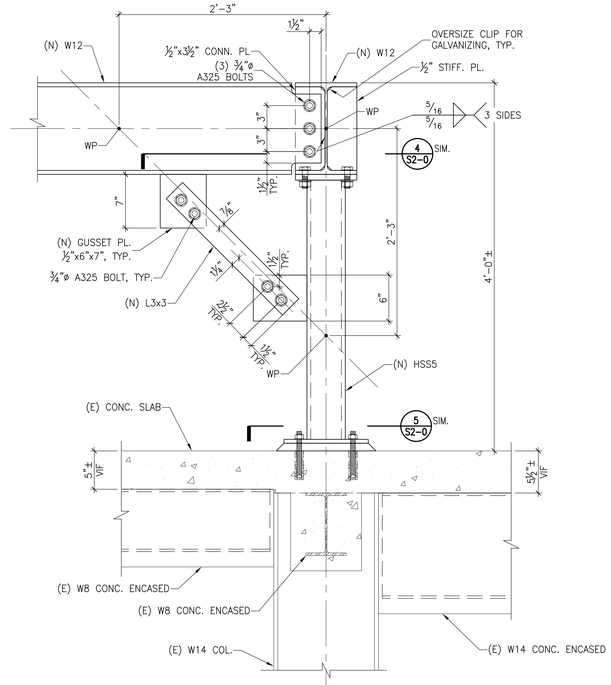

NOTES:
1. ALL STEEL SHALL BE HOT-DIP GALVANIZED. WHERE WELDING IS INDICATED, SEAL ALL WELD SEAMS. PROVIDE VENT HOLES IN POST CAP AND BASE PLATES.
2. HEADED STUDS ON (E) BEAM FLANGES ARE NOT SHOWN.

2 FRAMING DETAIL: TYP. POST AND KNEE BRACE

1 1/2" = 1'-0"

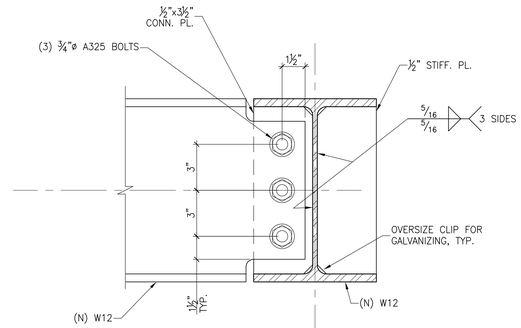

NOTES:
1. ALL STEEL SHALL BE HOT-DIP GALVANIZED. WHERE WELDING IS INDICATED, SEAL ALL WELD SEAMS.

3 FRAMING DETAIL: TYP. W12-TO-W12 CONNECTION

3" = 1'-0"

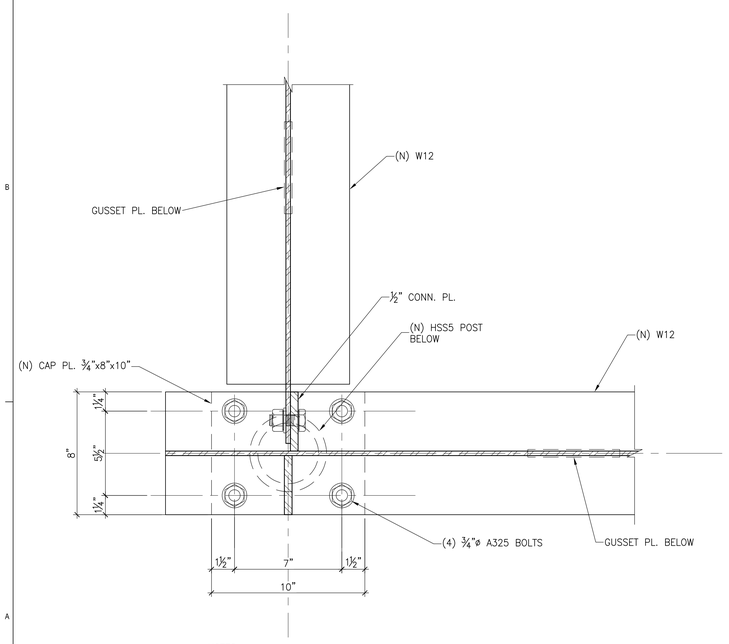

NOTES:
1. ALL STEEL SHALL BE HOT-DIP GALVANIZED.

4 FRAMING DETAIL: POST CAP PL.

3" = 1'-0"

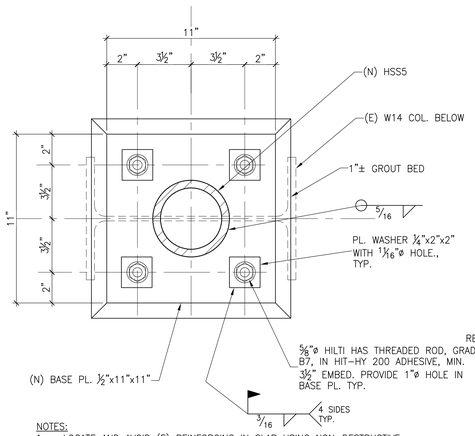

NOTES:
1. LOCATE AND AVOID (E) REINFORCING IN SLAB USING NON-DESTRUCTIVE METHODS PRIOR TO DRILLING HOLES FOR ANCHORS.
2. TOUCH UP FIELD WELD AFFECTED AREAS WITH GALVANIZING REPAIR PAINT.
3. ALL STEEL SHALL BE HOT-DIP GALVANIZED. WHERE WELDING IS INDICATED, SEAL ALL WELD SEAMS.

5 FRAMING DETAIL: BASE PLATE

3" = 1'-0"

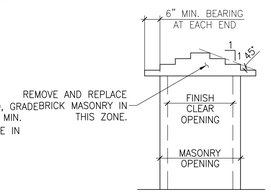

ELEVATION

ANGLE LINTEL INSTALLATION PROCEDURE:
1. SHORE EXISTING ROOF OR FLOOR FRAMING AS NECESSARY.
2. REMOVE MASONRY IN THE ZONES SHOWN TO THE EXTENT NECESSARY TO INSTALL THE NEW LINTEL STEEL. PROVIDE NEW LINTEL PER THE SCHEDULE. PROVIDE FOR A FULL 6" OF BEARING AT EACH END.
3. PROVIDE A ¾" THICK BED OF MORTAR AT END BEARINGS.
4. REBUILD WALL OVER LINTELS WITH SOLID BRICK CONSTRUCTION. WHERE DIRECTED BY THE ARCHITECT, PROVIDE MASONRY TO MATCH EXISTING.
5. SHIM WITH BRICK OR STEEL UNDERSIDE OF LINTELS TO MASONRY BELOW. DRY PACK SUCH THAT LOAD FROM WALL ABOVE IS TRANSFERRED TO THE WALL.
6. REMOVE WALL BELOW.

CLEAR SPAN	ANGLE SIZE (LLV)
4'-0"	L3½x3½x5/16
6'-0"	L3½x3½x5/16
8'-0"	L3½x4x5/16
10'-0"	L3½x5x5/16

NOTES:
1) ALL LINTELS ARE GALVANIZED
2) 6" MINIMUM BEARING
3) SEE ARCH. DWGS FOR ALL LOOSE LINTEL LOCATIONS

NOTE: DETAIL IS APPLICABLE TO METAL STUD WALL BACKUP. NOTIFY ENGINEER IF WALL BACKUP IS DIFFERENT.

6 BRICK OPENING DETAIL AND LINTEL SCHEDULE

NTS

PERKINS + WILL
225 Franklin Street, Suite 1100
Boston, MA 02110
t 617.478.0300
f 617.478.0321
www.perkinswill.com

CONSULTANTS
MEPFP
AKF GROUP LLC
41 Farnsworth Street, 3rd Floor
Boston, MA 02210
t 617.737.1111
f 617.737.4311

STRUCTURAL
SIMPSON GUMPERTZ & HEGER
Engineering of Structures and Building Enclosures
Simpson Gumpertz & Heger Inc. 41 Seyon Street, Building 1, Suite 500 Waltham, Massachusetts 02453
tel 781.907.9000 fax 781.907.9009 www.sgh.com

SGH Project Number 150093.07

PROJECT
ACCU RELOCATION
22 Bramhall Street
Portland, Maine 04102

Maine Medical Center
MaineHealth

MAINE MEDICAL CENTER
22 Bramhall Street
Portland, Maine 04102

STATE OF MAINE JOHN H. THOMSEN IV No. 17420 LICENSED PROFESSIONAL ENGINEER
6-24-2016

06.24.2016
ISSUE CHART

NO	ISSUE	DATE
	ISSUED FOR PERMIT	06.24.2016

Job Number	152168.029
Checked	MJB
Approved	JHT

TITLE
STEEL DETAILS

SHEET NUMBER
S2-0

Copyright @ 2016 Perkins+Will

6/24/2016 3:24:02 PM
\\sgh.com\offices\BOS\Projects\2015\150093.07-RICHD\Drawings\Working_Set\150093.07_S 2-0_Sections and Details.dwg