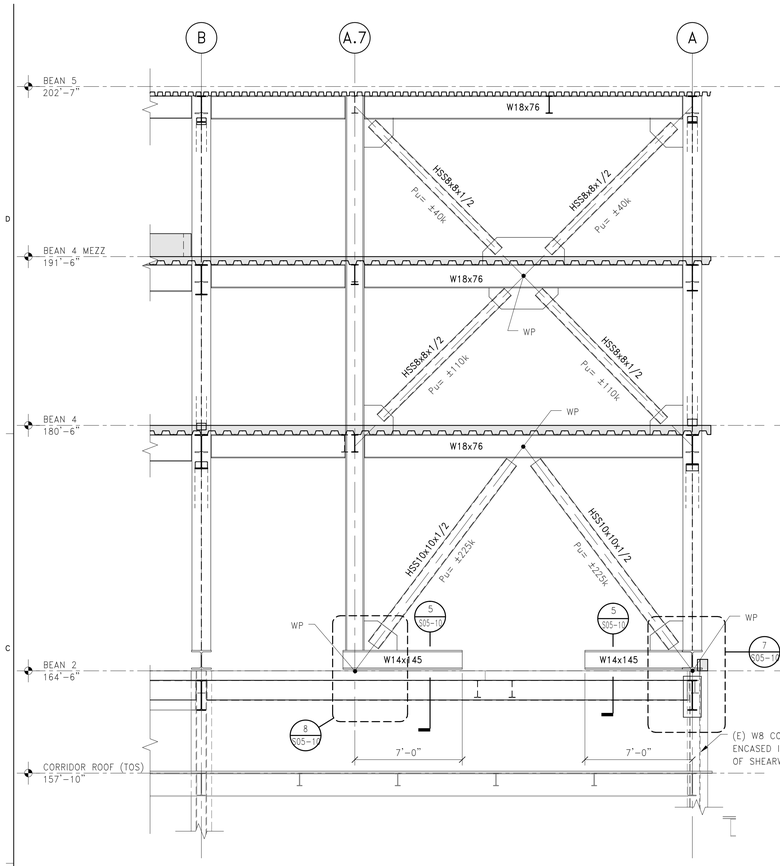

1 S05-10 GRIDLINE 11 BRACED FRAME
1/4" = 1'-0"

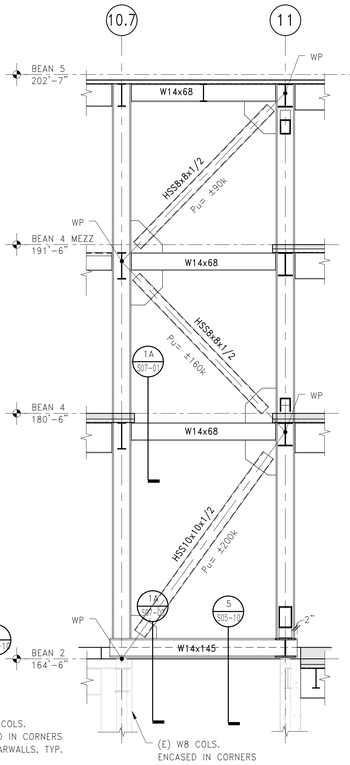

2 S05-10 GRIDLINE A BRACED FRAME
1/4" = 1'-0"

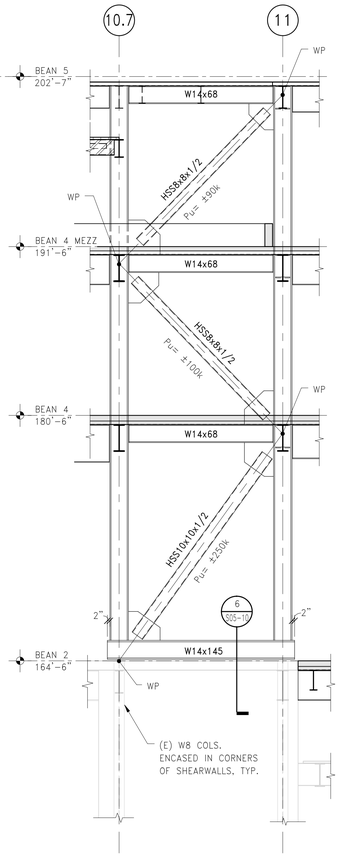

3 S05-10 GRIDLINE B BRACED FRAME
1/4" = 1'-0"

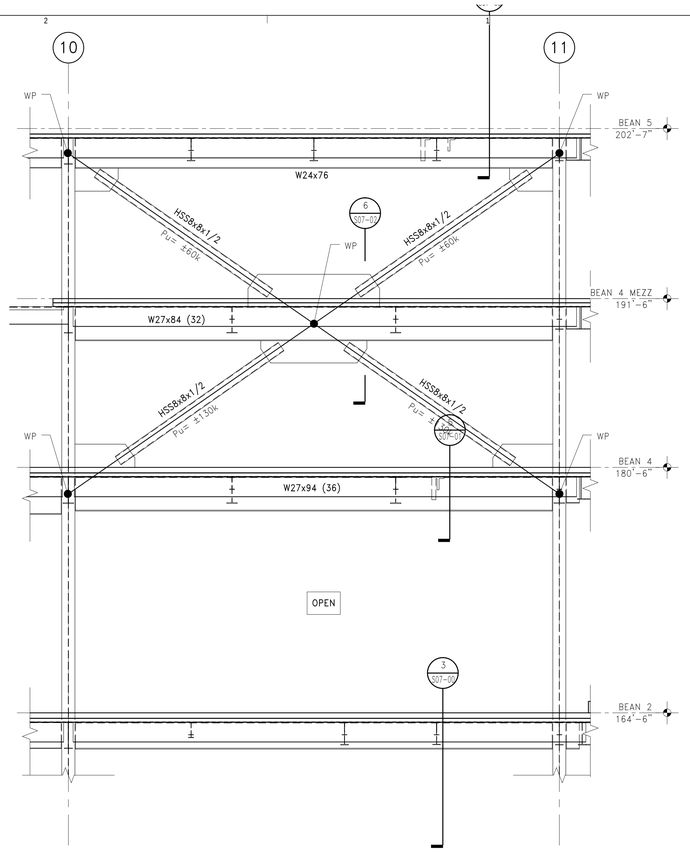

4 S05-10 PENTHOUSE BRACE ON GRID F
1/4" = 1'-0"

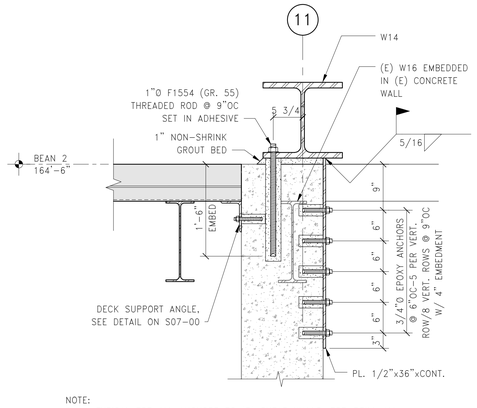

NOTE:
1. TYPICAL FOR ALL ANCHORS TO (E) SHEAR WALLS: PRE-DRILL ALL HOLES IN FIELD PRIOR TO FABRICATING STEEL. MATCH FABRICATION TO AS-DRILLED FIELD DIMENSIONS.

5 S05-10 SECTION: DRAG LINK ANCHORAGE
1" = 1'-0"

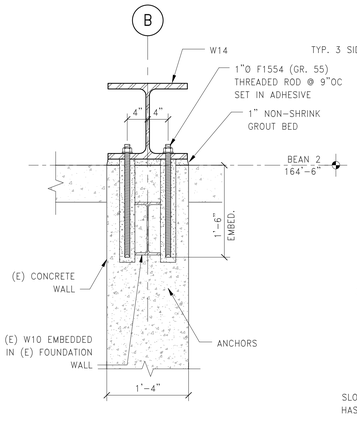

6 S05-10 SECTION: DRAG LINK ANCHORAGE
1" = 1'-0"

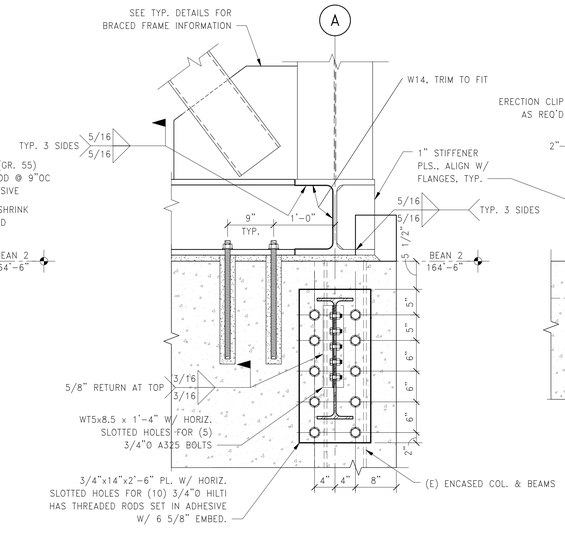

7 S05-10 SECTION: BRACED FRAME BASE CONN.
1" = 1'-0"

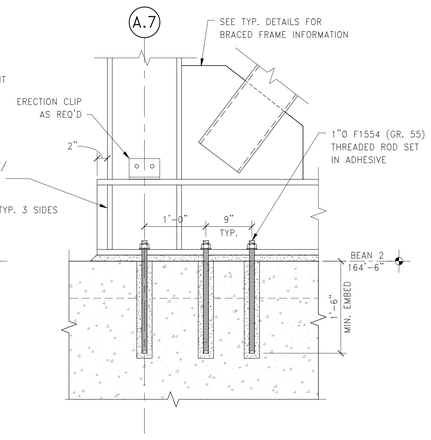

8 S05-10 SECTION: BRACED FRAME BASE CONN.
1" = 1'-0"

PERKINS + WILL

225 Franklin St., Suite 1100
Boston, MA 02110
t 617.478.0300
f 617.478.0321
www.perkinswill.com

Maine Medical Center
MaineHealth

Bean 2 Roof Addition

22 Bramhall Street, Portland, Maine 04102

MEP ENGINEER
AKF ENGINEERS
41 Farnsworth Street, 3rd Floor
Boston, MA 02210
t 617.737.1111
f 617.737.4311

STRUCTURAL ENGINEER
SIMPSON GUMPERTZ & HEGER
41 Seyon Street, Building 1, Suite 500
Waltham, MA 02453
t 781.907.9000
SGH Project No. 100439.09

MEDICAL EQUIPMENT PLANNERS
RTKL ASSOCIATES INC.
1717 PACIFIC AVENUE
DALLAS, TX 75201
t 214.468.7600
f 214.468.7601

COST ESTIMATOR
DG JONES & PARTNERS
3 Baldwin Green Common, Suite 202
Woburn, MA 01801
t 781.932.3131
f 781.932.3199

CONSTRUCTION DOCUMENTS
06.14.2013

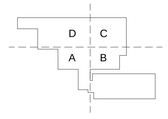

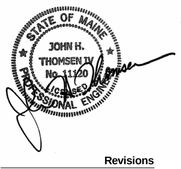

Revisions

NO	ISSUE	DATE
	ISSUED FOR PERMIT	02/07/14

Sheet Information

Date	12 APRIL 2013
Job #	C140135461(MMC)/152168.000
Drawn	BMT/SWW
Checked	MJB
Approved	JHT

Title

BRACED FRAME ELEVATIONS AND DETAILS

Sheet

S05-10

Copyright © 2011 Perkins+Will

2/7/2014 3:43:30 PM
I:\BOSProjects\20100100439.09-BGSE\Drawings\Working_Set_Revit\LOCAL USERS\MJB\bds\cMMC_BEAN2_NEW_STRUC_MJB\bds\c.rvt