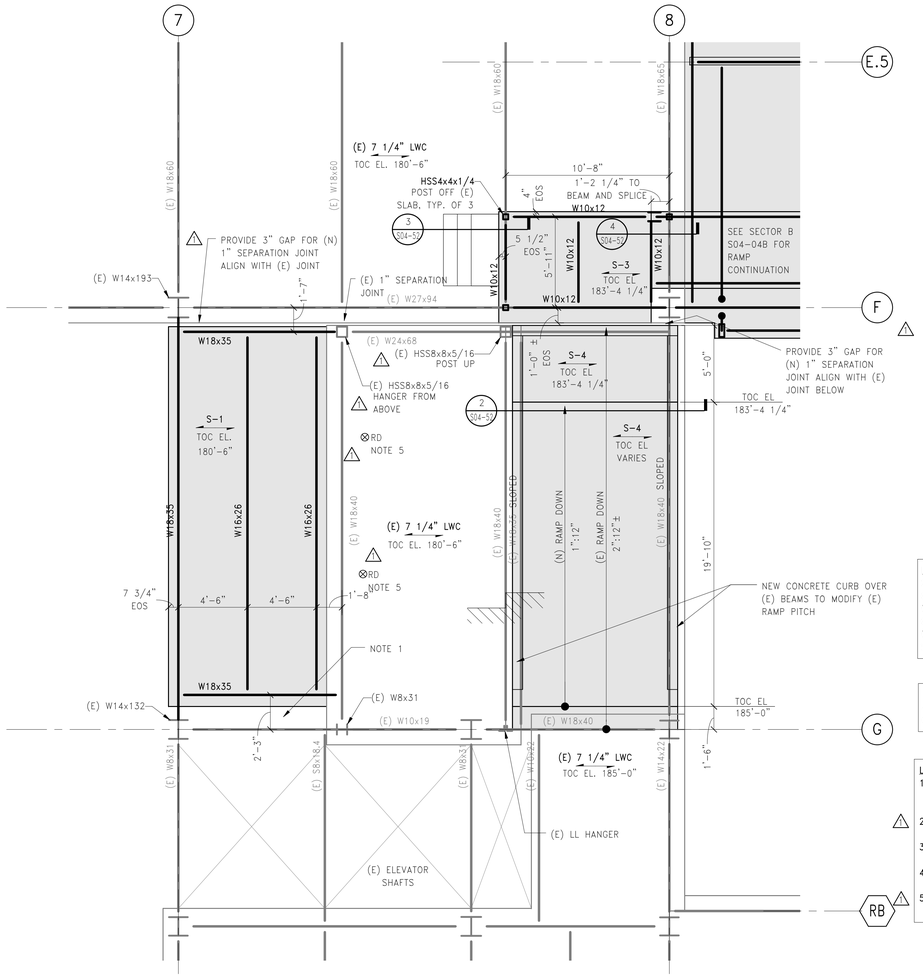

1 S04-52 PART PLAN: LEVEL 4 ROOF INFILL AND RAMP – SECTOR A
1/4" = 1'-0"

NOTE S-3:
2 1/2" MIN. NORMAL WEIGHT CONCRETE ON 1 1/2"-20GA. COMPOSITE METAL DECK. TOTAL THICKNESS = 4". REINFORCE WITH #3@15" OC, EACH WAY. SEE PLAN FOR TOP OF CONCRETE ELEVATION, TOP OF STEEL 4" BELOW TOC UON WITH [±X'-X"], INDICATING CHANGE FROM TYPICAL TOP OF STEEL ELEVATION.

NOTE S-4:
4" NWC SLAB WITH #3@15" OC, EACH WAY.
CAST OVER RIGID INSULATION FORMWORK.

LEVEL 04 PLAN NOTES:
1. CONTRACTOR SHALL CARRY ALLOWANCE FOR BRICK REMOVAL, TEMPORARY SUPPORT AND REPLACEMENT AS REQUIRED WHENEVER NEW CONSTRUCTION CONNECTS TO EXISTING FRAMING.
2. LWC SLOPED TOPPING, PITCH TO DRAIN. ADD ALTERNATE: SNOW-MELT SYSTEM, SET BETWEEN CONCRETE PAVERS. COORD. WITH ARCH. DRAWINGS.
3. COORDINATE FINAL EQUIPMENT SUPPORT LOCATIONS WITH APPROVED MANUFACTURER'S SUBMITTALS.
4. COORDINATE FINAL SLAB OPENINGS WITH MECHANICAL DRAWINGS AND APPROVED MECHANICAL SUBMITTALS. FRAME PER TYP. DETAILS.
5. SEE TYPICAL DETAILS FOR FRAMING AT ROOF DRAINS AND VENT OPENINGS. MAXIMUM EQUIPMENT WEIGHT = 600 LBS AT OPENING.

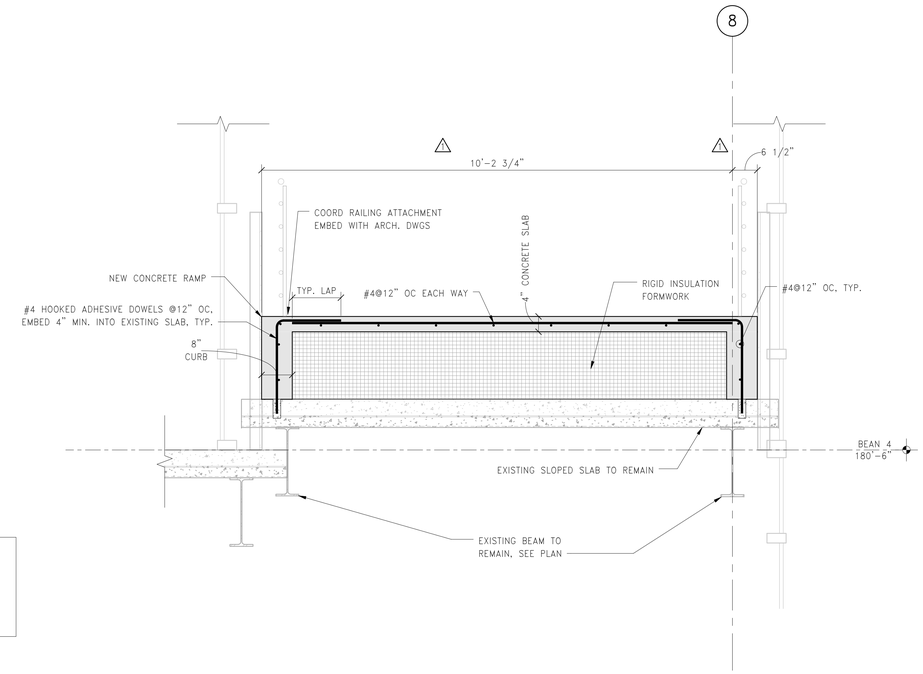

2 S04-52 SECTION: NEW CONCRETE RAMP OVER (E) RAMP
3/4" = 1'-0"

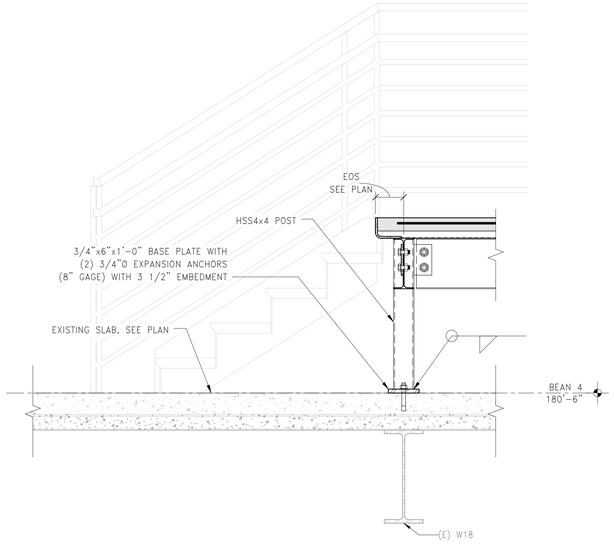

3 S04-52 SECTION: POST BASE CONNECTION TO SLAB AT LANDING
1" = 1'-0"

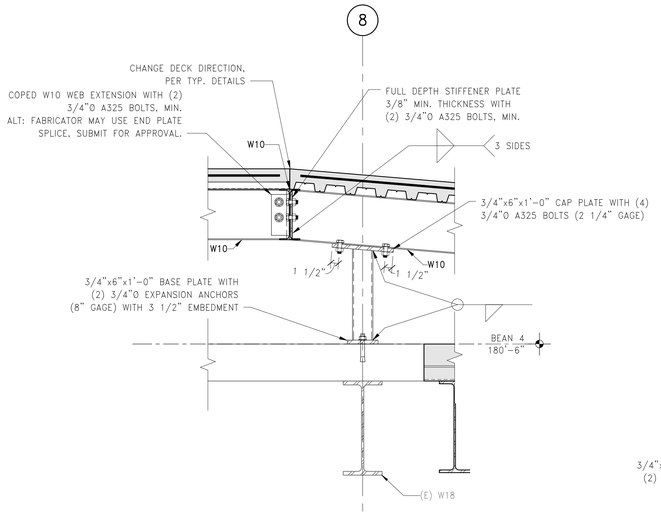

4 S04-52 SECTION: SLOPED BEAM SPLICE CONNECTION TO LANDING
1" = 1'-0"

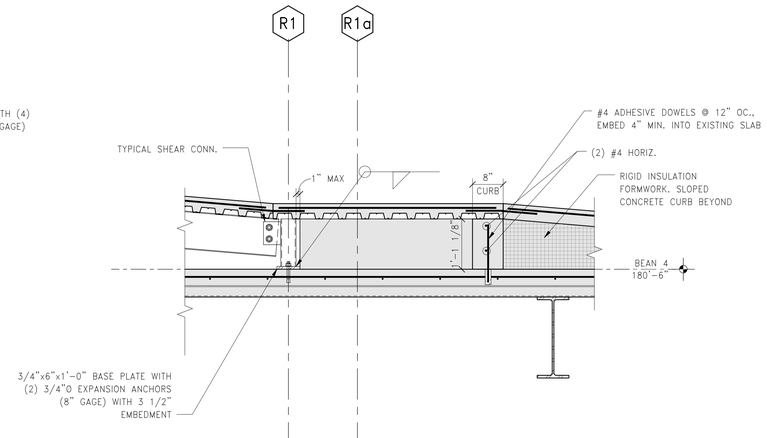

5 S04-52 SECTION: CONCRETE RAMP AT INTERMEDIATE LANDING
3/4" = 1'-0"

NORTH

PERKINS + WILL

225 Franklin St., Suite 1100
Boston, MA 02110
t 617.478.0300
f 617.478.0321
www.perkinswill.com

Maine Medical Center
MaineHealth

Bean 2 Roof Addition

22 Bramhall Street, Portland, Maine 04102

MEP ENGINEER
AKF ENGINEERS
41 Farnsworth Street, 3rd Floor
Boston, MA 02210
t 617.737.1111
f 617.737.4311

STRUCTURAL ENGINEER
SIMPSON GUMPERTZ & HEGER
41 Seyon Street, Building 1, Suite 500
Waltham, MA 02453
t 781.907.9000
SGH Project No. 100439.09

MEDICAL EQUIPMENT PLANNERS
RTKL ASSOCIATES INC.
1717 PACIFIC AVENUE
DALLAS, TX 75201
t 214.468.7600
f 214.468.7601

COST ESTIMATOR
DG JONES & PARTNERS
3 Baldwin Green Common, Suite 202
Woburn, MA 01801
t 781.932.3131
f 781.932.3199

CONSTRUCTION DOCUMENTS
06.14.2013

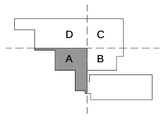

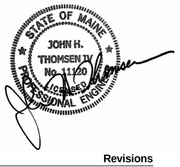

Revisions

NO	ISSUE	DATE
	ISSUED FOR PERMIT	02/07/14
1	ADDENDUM #1	06/14/13

Sheet Information

Date	12 APRIL 2013
Job #	C140135461(MMC)/152168.000
Drawn	BMT/SWW
Checked	MJB
Approved	JHT

Title

ELEVATOR TOWER PART PLANS - SECTOR A

Sheet

S04-52

Copyright © 2011 Perkins+Will

2/7/2014 3:43:21 PM
I:\BOSProjects\20100100439.09-BGSE\Drawings\Working_Set_Revit\LOCAL USERS\WJB\rdb\cMMC_BEAN2_NEW_STRUC_WJBrdbuc.rvt