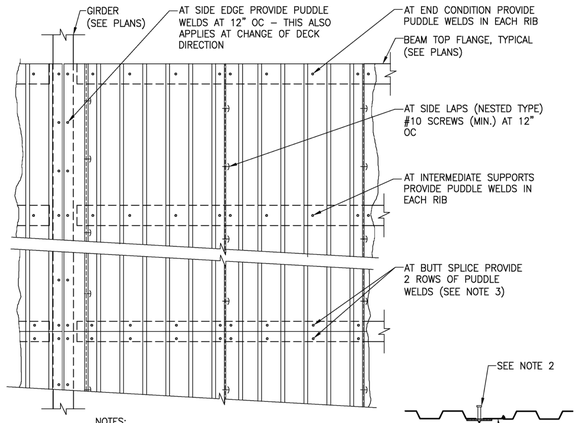

NOTES:
1. PUDDLE WELDS TO BE 5/8"ø (MIN.)
2. WELDED HEADED STUDS MAY REPLACE PUDDLE WELDS.
3. DECK ENDS ARE TO BE BUTT SPLICED. LAPPED DECK ENDS ARE PROHIBITED.

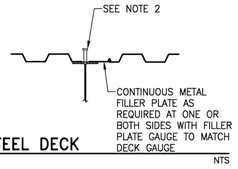

1 FASTENING PATTERN FOR 3" COMPOSITE STEEL DECK

NTS

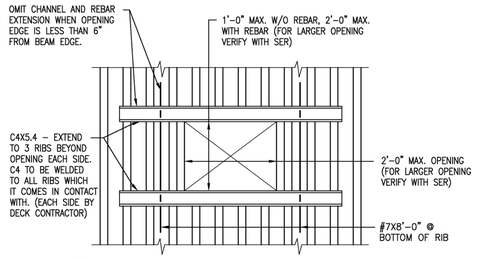

NOTES:
1. NO REINFORCEMENT REQUIRED FOR HOLES 6"ø OR LESS.
2. PROVIDE POUR STOP AT ALL OPENINGS.
3. SHORING OF DECK IS AN ACCEPTABLE ALTERNATIVE TO REINFORCEMENT CHANNELS AND SHEET METAL SHOWN FOR DECK CUT BEFORE CONCRETE IS POURED.
4. DETAIL DOES NOT APPLY FOR SINGLE SPAN FRAMING. FOR THESE CONDITIONS ADD SUB FRAMING, INCREASE GAUGE OF DECK, OR SUBMIT PREFERRED SCHEME TO SER FOR REVIEW AND APPROVAL.

FOR OPENINGS 10" TO 2'-0" PERPENDICULAR TO DECK

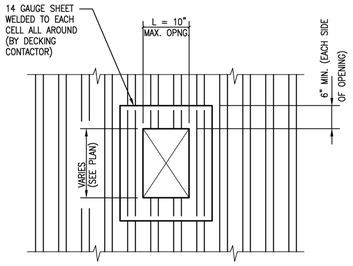

NOTE:
NO REINFORCEMENT REQUIRED WHERE "L" IS 6" OR LESS.

FOR OPENINGS UP TO 10" PERPENDICULAR TO DECK

2 COMPOSITE FLOOR DECK REINFORCING AT OPENINGS

NTS

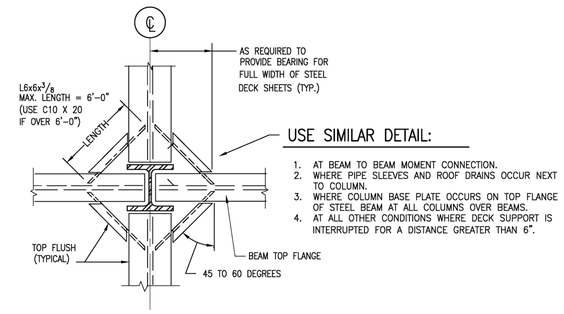

USE SIMILAR DETAIL:

1. AT BEAM TO BEAM MOMENT CONNECTION.
2. WHERE PIPE SLEEVES AND ROOF DRAINS OCCUR NEXT TO COLUMN.
3. WHERE COLUMN BASE PLATE OCCURS ON TOP FLANGE OF STEEL BEAM AT ALL COLUMNS OVER BEAMS.
4. AT ALL OTHER CONDITIONS WHERE DECK SUPPORT IS INTERRUPTED FOR A DISTANCE GREATER THAN 6".

3 DECK SUPPORT AT MOMENT COLUMNS AND OBSTRUCTIONS

NTS

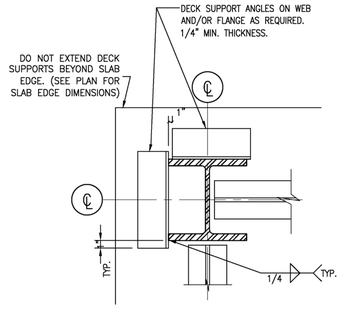

NOTE:
POUR STOPS, CONTINUOUS ALONG SLAB EDGE, NOT SHOWN FOR CLARITY.

4 DECK SUPPORT AT PERIMETER COLUMNS

NTS

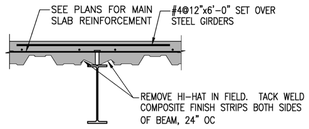

GAP	FINISH STRIP GAUGE
0 TO 4"	20
4" TO 7"	16
7" TO 9"	14

NOTES:
1. DETAIL APPLIES ONLY TO BEAMS WITH STUDS, AND TO ALL GIRDERS.
2. DETAIL APPLIES TO SKEW BEAMS AS REQUIRED FOR STUD PLACEMENT

5 STEEL DECK PARALLEL TO STEEL SUPPORT DETAIL

NTS

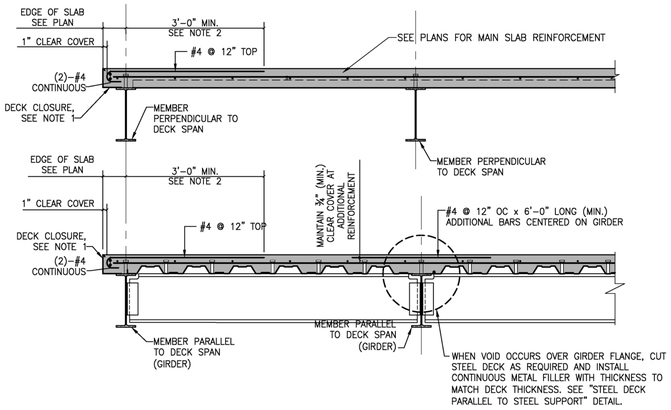

NOTES:
1. COORDINATE EDGE CONDITION WITH "COMPOSITE DECK SLAB EDGE DETAIL" AND BUILDING SECTIONS.
2. GIRDERS ARE DEFINED AS BEAMS FRAMING TO COLUMNS AND/OR SUPPORTING BEAMS LARGER THAN W8.

6 TYPICAL REINFORCEMENT IN STEEL-DECK SUPPORTED SLABS

NTS

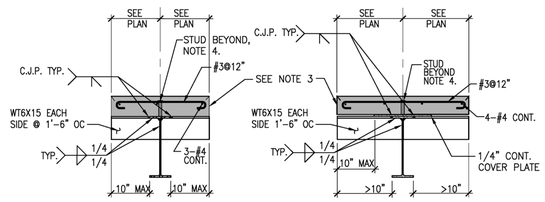

NOTES:
1. THERE SHALL BE NO ECCENTRIC MASONRY LOADS ON SLAB NOR MEP ATTACHMENTS TO EDGE OF SLAB.
2. DEVELOP LONGITUDINAL BARS INTO SLAB BEYOND SLAB EDGE WITH 60 d_b EXTENSION OR STANDARD HOOK IF SPACE DOES NOT ALLOW FOR EXTENSION.
3. COORDINATE EDGE CONDITION WITH "COMPOSITE DECK SLAB EDGE DETAIL" AND BUILDING SECTIONS.

7 FLOOR OPENING ON BOTH SIDES OF BEAM

NTS

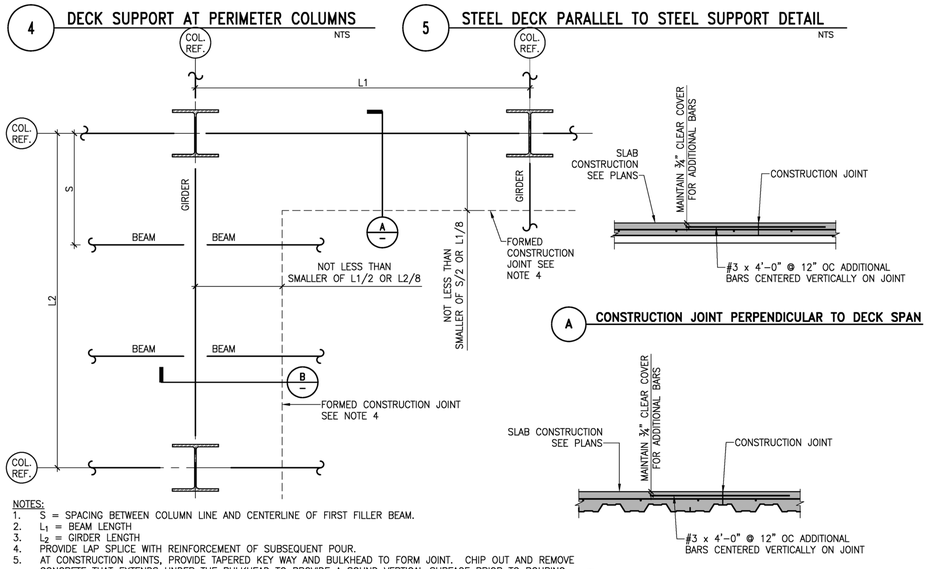

A CONSTRUCTION JOINT PERPENDICULAR TO DECK SPAN

B CONSTRUCTION JOINT PARALLEL TO DECK SPAN

NOTES:
1. S = SPACING BETWEEN COLUMN LINE AND CENTERLINE OF FIRST FILLER BEAM.
2. L_1 = BEAM LENGTH
3. L_2 = GIRDER LENGTH
4. PROVIDE LAP SPLICE WITH REINFORCEMENT OF SUBSEQUENT POUR.
5. AT CONSTRUCTION JOINTS, PROVIDE TAPERED KEY WAY AND BULKHEAD TO FORM JOINT. CHIP OUT AND REMOVE CONCRETE THAT EXTENDS UNDER THE BULKHEAD TO PROVIDE A SOUND VERTICAL SURFACE PRIOR TO POURING THE ABUTTING CONCRETE.
6. PRIOR TO THE SUBSEQUENT POUR WET FACE OF JOINT WITH WATER MIST AND REMOVE ANY STANDING WATER FROM DECK. SURFACE OF CONSTRUCTION JOINT SHALL BE CLEAN AND FREE OF LAITANCE.
7. WHERE CONSTRUCTION JOINTS ARE NOT SHOWN ON PLAN, SUBMIT TO THE STRUCTURAL ENGINEER OF RECORD FOR REVIEW DRAWINGS WITH THE LOCATION OF CONSTRUCTION JOINTS AND THE CONCRETE PLACING SEQUENCE. SUBMIT DRAWINGS PRIOR TO PREPARATION OF THE REINFORCEMENT SHOP DRAWINGS.

9 CONSTRUCTION JOINT LAYOUT FOR COMPOSITE SLABS

NTS

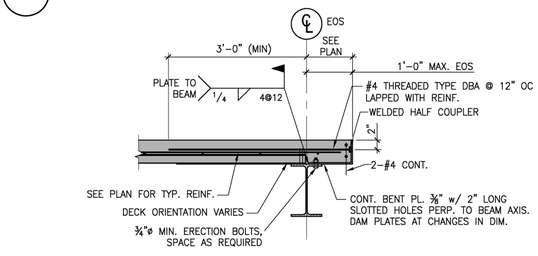

UP TO 1'-0" EOS

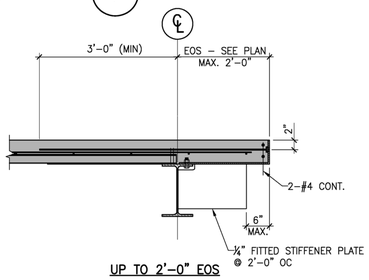

UP TO 2'-0" EOS

6 TYPICAL REINFORCEMENT IN STEEL-DECK SUPPORTED SLABS

NTS

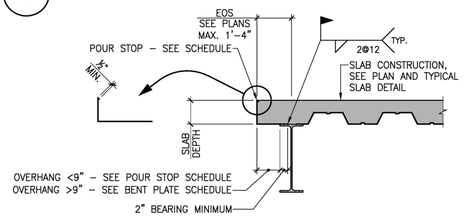

TYPICAL INTERIOR SLAB EDGE UP TO 1'-4" EOS

NOTES:
1. UON, PLACE GALVANIZED SHEET METAL POUR STOPS. POUR STOPS SHOWN ARE A MINIMUM. GENERAL CONTRACTOR TO COORDINATE WITH MANUFACTURER.
2. FOR LARGER OVERHANGS USE TYPICAL EXTERIOR SLAB EDGE.

8 TYPICAL EXTERIOR SLAB EDGE DETAIL

NTS

MINIMUM POUR STOP GAUGE										
SLAB DEPTH (INCHES)	OVERHANG (INCHES)									
	0	1	2	3	4	5	6	7	8	9
6¼ OR 7¼	16	16	14	14	12	12	12	10	10	10

MINIMUM BENT PLATE THICKNESS (IN.)									
SLAB THICKNESS (INCHES)	OVERHANG (INCHES)								
	10	11	12	13	14	15	16		
6¼ OR 7¼	3/16	3/16	1/4	1/4	5/16	5/16	5/16		

10 TYPICAL INTERIOR SLAB EDGE DETAIL

NTS

PERKINS + WILL

225 Franklin St., Suite 1100
Boston, MA 02110
t 617.478.0300
f 617.478.0321
www.perkinswill.com

Maine Medical Center
MaineHealth

Bean 2 Roof Addition

22 Bramhall Street, Portland, Maine 04102

MEP ENGINEER
AKF ENGINEERS
41 Farnsworth Street, 3rd Floor
Boston, MA 02210
t 617.737.1111
f 617.737.4311

STRUCTURAL ENGINEER
SIMPSON GUMPERTZ & HEGER
41 Seyon Street, Building 1, Suite 500
Waltham, MA 02453
t 781.907.9000
SGH Project No. 100439.09

MEDICAL EQUIPMENT PLANNERS
RTKL ASSOCIATES INC.
1717 PACIFIC AVENUE
DALLAS, TX 75201
t 214.468.7600
f 214.468.7601

COST ESTIMATOR
DG JONES & PARTNERS
3 Baldwin Green Common, Suite 202
Woburn, MA 01801
t 781.932.3131
f 781.932.3199

CONSTRUCTION DOCUMENTS
06.14.2013

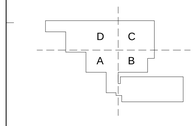

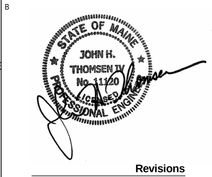

Revisions

NO	ISSUE	DATE
	ISSUED FOR PERMIT	02/07/14

Sheet Information

Date	12 APRIL 2013
Job #	C140135461(MMC)/152168.000
Drawn	SWW
Checked	MJB
Approved	JHT

Title

TYPICAL STEEL DETAILS

Sheet

S00-22

Copyright © 2011 Perkins+Will

2/7/2014 3:42:23 PM
I:\BOS\Projects\2010\100439.09-BGSE\Drawings\Working_Set_Revit\LOCAL USERS\WJB\0da\cMMC_BEAN2_NEW_STRUC_AJB\ddsuc.rvt