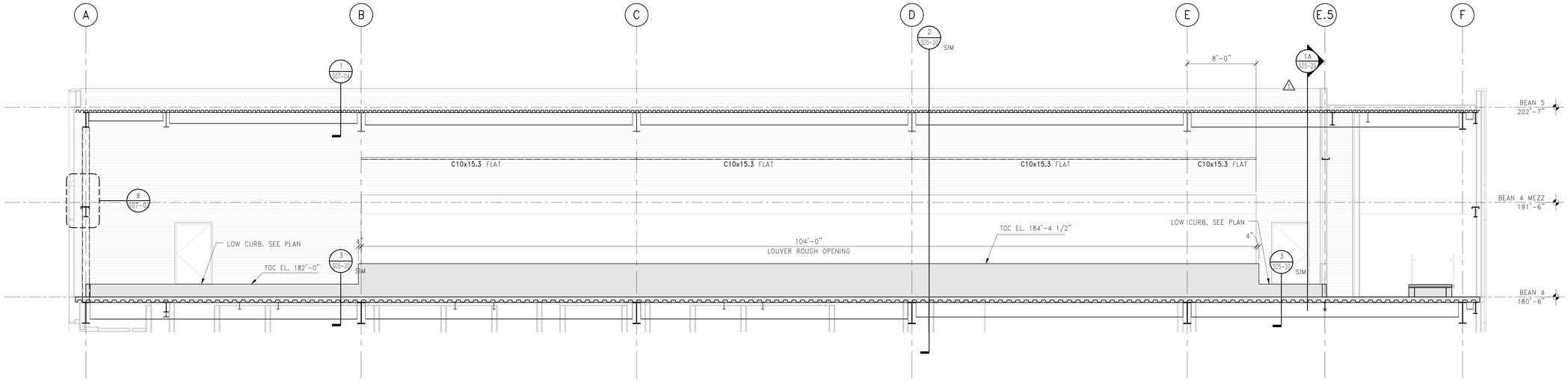

1 S05-20 ELEVATION: MECH AREAWAY LOUVER SUPPORT FRAMING – EAST WALL
3/16" = 1'-0"

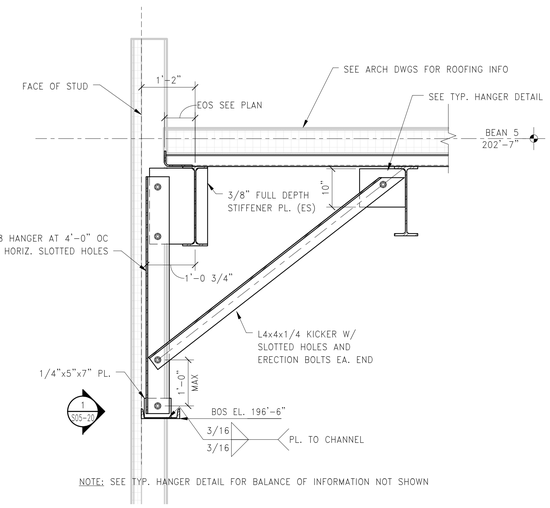

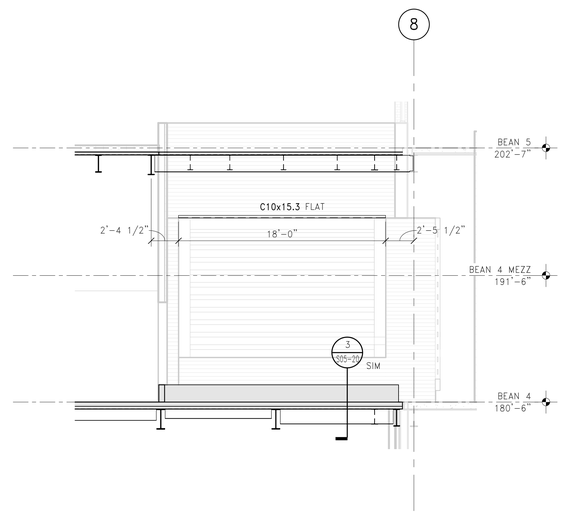

1A S05-20 ELEVATION: MECH AREAWAY LOUVER SUPPORT FRAMING – SOUTH WALL
3/16" = 1'-0"

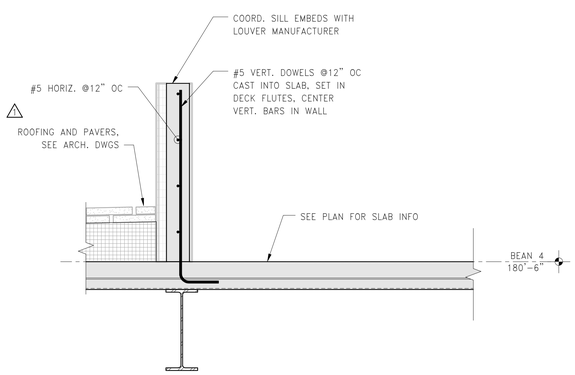

2 S05-20 TYPICAL LOUVER JAMB TOP AND BOTTOM CONNECTION
3/4" = 1'-0"

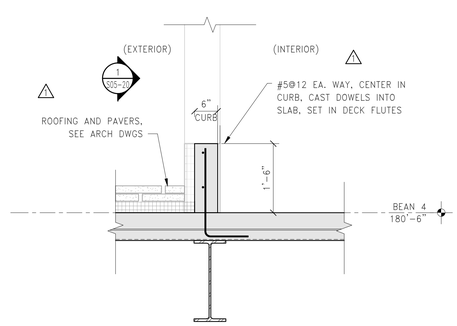

3 S05-20 TYPICAL AREAWAY PERIMETER CURB
3/4" = 1'-0"

PERKINS + WILL

225 Franklin St., Suite 1100
Boston, MA 02110
t 617.478.0300
f 617.478.0321
www.perkinswill.com

Maine Medical Center
MaineHealth

Bean 2 Roof Addition

22 Bramhall Street, Portland, Maine 04102

MEP ENGINEER

AKF ENGINEERS

41 Farnsworth Street, 3rd Floor
Boston, MA 02210
t 617.737.1111
f 617.737.4311

STRUCTURAL ENGINEER

SIMPSON GUMPERTZ & HEGER

41 Seyon Street, Building 1, Suite 500
Waltham, MA 02453
t 781.907.9000
SGH Project No. 100439.09

MEDICAL EQUIPMENT PLANNERS

RTKL ASSOCIATES INC.

1717 PACIFIC AVENUE
DALLAS, TX 75201
t 214.468.7600
f 214.468.7601

COST ESTIMATOR

DG JONES & PARTNERS

3 Baldwin Green Common, Suite 202
Woburn, MA 01801
t 781.932.3131
f 781.932.3199

CONSTRUCTION DOCUMENTS

06.14.2013

STATE OF MAINE
JOHN H. THOMSEN IV
No. 11120
LICENSED
PROFESSIONAL ENGINEER

Revisions

	ISSUED FOR PERMIT	02/07/14
1	ADDENDUM #1	06/14/13
NO	ISSUE	DATE

Sheet Information

Date	12 APRIL 2013
Job #	C140135461(MMC)/152168.000
Drawn	KEC
Checked	MJB
Approved	JHT

Title

LOUVER FRAME ELEVATIONS AND DETAILS

Sheet

S05-20

Copyright © 2011 Perkins+Will

2/7/2014 3:43:43 PM
I:\BOS\Projects\2010\100439.09-B2SE\Drawings\Working_Set_Revit\LOCAL USERS\MJB\dds\dc\MMC_BEAN2_NEW_STRUC_MJBddsc.rvt