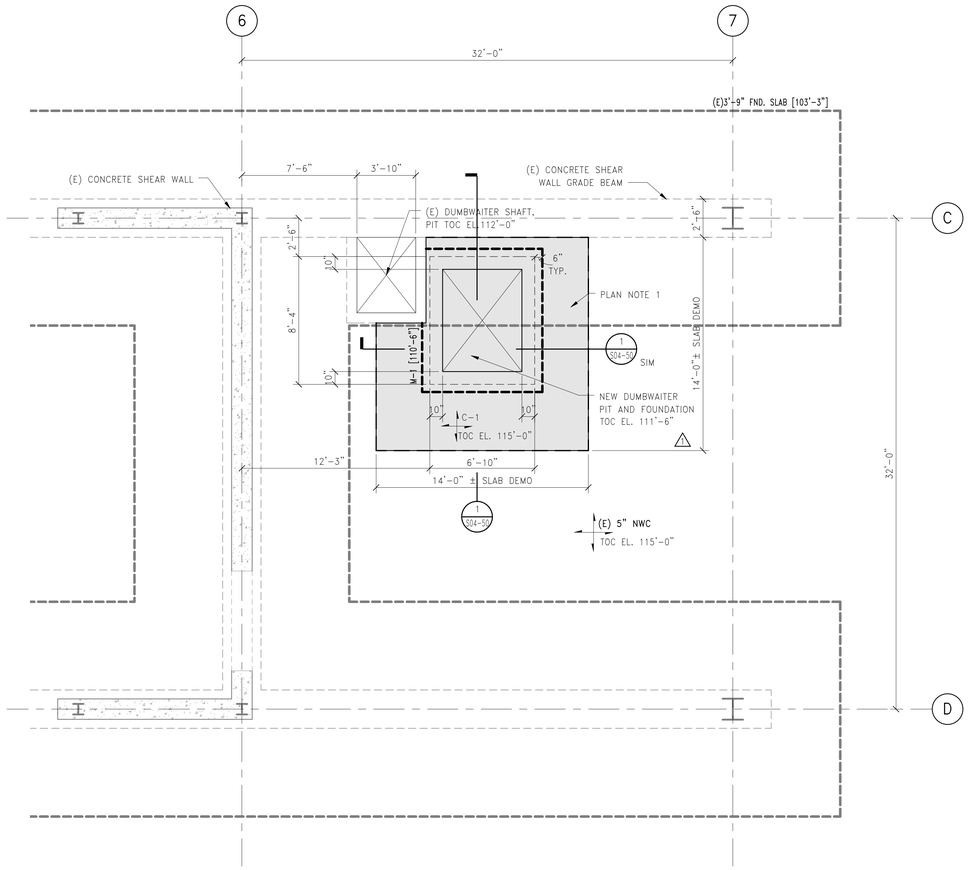

NOTE C-1:
5" THICK CONCRETE SLAB-ON-GRADE REINFORCED W/ #3@15OC, EW

NOTE M-1:
12" THICK CONCRETE MAT SLAB FOUNDATION REINFORCED W/ #5@12" HOOKED BARS EW TOP AND BOTTOM.

DUMBWAITER PART PLAN NOTES:
1. CUT BACK SLAB-ON-GRADE AS REQUIRED TO INSTALL NEW PIT FOUNDATIONS.
2. SAW CUT NEW SLAB OPENING AFTER INSTALLING ALL NEW STEEL FRAMING AND CONNECTIONS. DO NOT OVERCUT OPENING AT CORNERS.

SB / S04-50 SUB-BASEMENT / FOUNDATION PLAN – SECTOR D

1/4" = 1'-0"

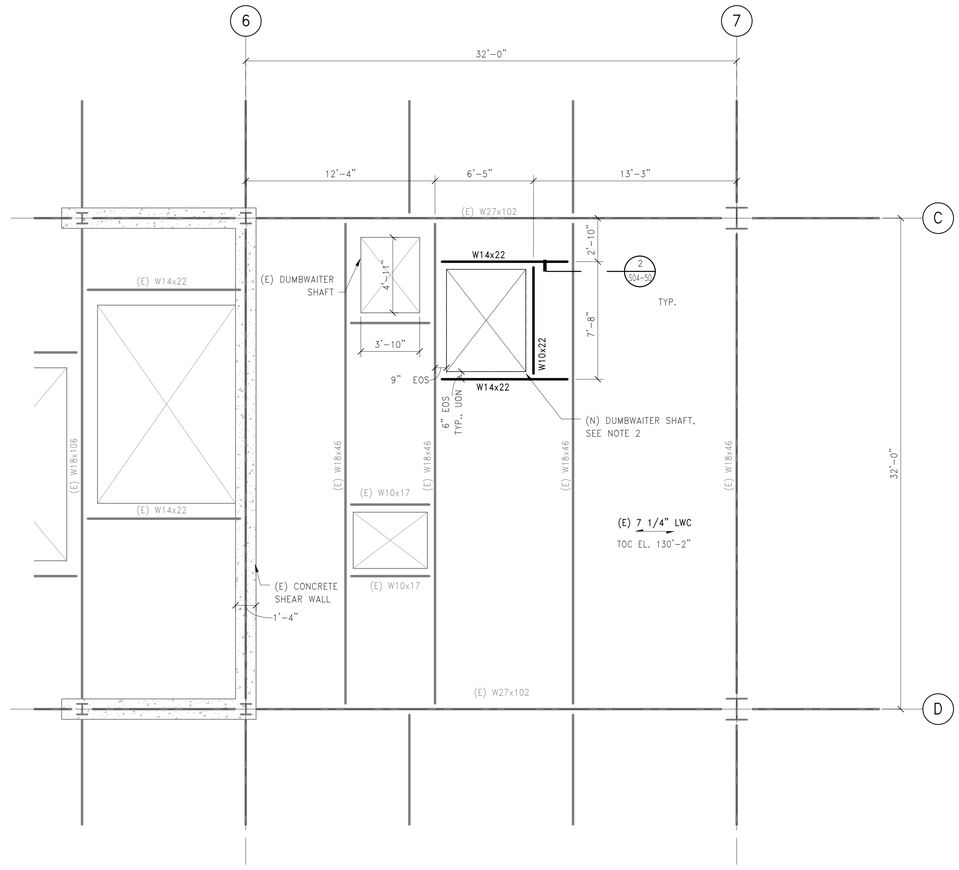

DUMBWAITER PART PLAN NOTES:
1. CUT BACK SLAB-ON-GRADE AS REQUIRED TO INSTALL NEW PIT FOUNDATIONS.
2. SAW CUT NEW SLAB OPENING AFTER INSTALLING ALL NEW STEEL FRAMING AND CONNECTIONS. DO NOT OVERCUT OPENING AT CORNERS.

0B / S04-50 BASEMENT FRAMING PLAN – SECTOR D

1/4" = 1'-0"

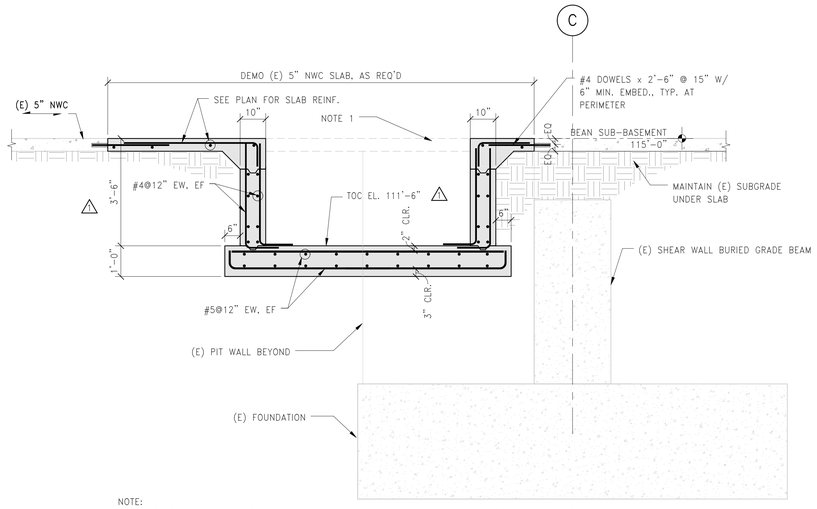

NOTE:
1. SEE TYPICAL DETAILS FOR SILL. COORDINATE WITH DUMBWAITER MANUFACTURER REQUIREMENTS

1 / S04-50 SECTION AT NEW DUMBWAITER PIT

1/2" = 1'-0"

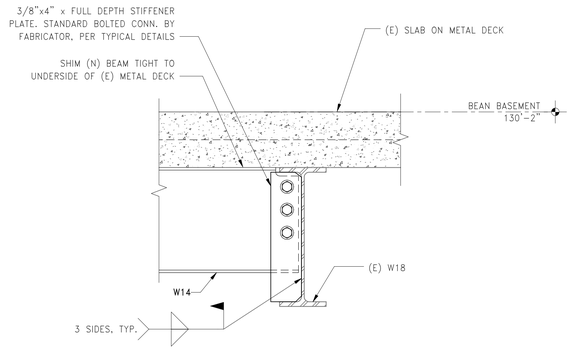

2 / S04-50 SECTION: (N) STEEL BEAM TO (E) BEAM AT DUMBWAITER

1 1/2" = 1'-0"

LEGEND: GRID LINES

- F.5 — EXISTING ED EXPANSION (1997)
- R# — EXISTING RICHARDS BUILDING (1966)
- 11 — EXISTING BEAN BUILDING (1983 + 1996)
- 8.2 — EXISTING CORRIDOR PROJECT (2004)

NORTH

PERKINS + WILL

225 Franklin St., Suite 1100
Boston, MA 02110
t 617.478.0300
f 617.478.0321
www.perkinswill.com

Maine Medical Center
MaineHealth

Bean 2 Roof Addition

22 Bramhall Street, Portland, Maine 04102

MEP ENGINEER
AKF ENGINEERS
41 Farnsworth Street, 3rd Floor
Boston, MA 02210
t 617.737.1111
f 617.737.4311

STRUCTURAL ENGINEER
SIMPSON GUMPERTZ & HEGER
41 Seyon Street, Building 1, Suite 500
Waltham, MA 02453
t 781.907.9000
SGH Project No. 100439.09

MEDICAL EQUIPMENT PLANNERS
RTKL ASSOCIATES INC.
1717 PACIFIC AVENUE
DALLAS, TX 75201
t 214.468.7600
f 214.468.7601

COST ESTIMATOR
DG JONES & PARTNERS
3 Baldwin Green Common, Suite 202
Woburn, MA 01801
t 781.932.3131
f 781.932.3199

CONSTRUCTION DOCUMENTS
06.14.2013

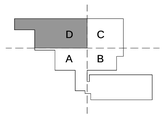

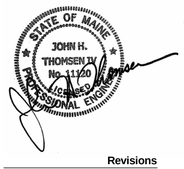

Revisions

NO	ISSUE	DATE
	ISSUED FOR PERMIT	02/07/14
1	ADDENDUM #1	06/14/13

Sheet Information

Date	12 APRIL 2013
Job #	C140135461(MMC)/152168.000
Drawn	KEC
Checked	MJB
Approved	JHT

Title

DUMBWAITER PART PLANS - SECTOR D

Sheet

S04-50

Copyright © 2011 Perkins+Will

2/7/2014 3:43:17 PM
I:\BOS\Projects\2010\100439.09-B2SE\Drawings\Working_Set_Revit\LOCAL USERS\MJB\bds\cMMC_BEAN2_NEW_STRUC_MJB\bdsc.rvt