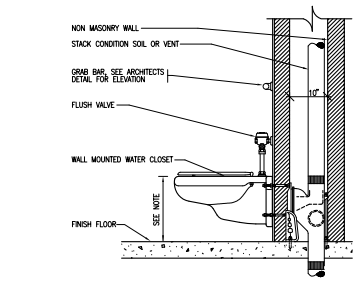


NOTE:
HANDICAPPED WC MOUNTING HIGHT SHALL BE 17" FROM FINISH FLOOR TO FIXTURE RIM.
STANDARD USE WC MOUNTING HIGHT SHALL BE 15" FROM FINISH FLOOR TO FIXTURE RIM.

1 SINGLE FIXTURE CHASE CROSS SECTION
SCALE: NTS

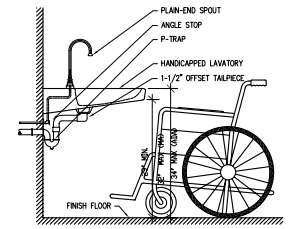


2 ACCESSIBLE LAVATORY
SCALE: NTS

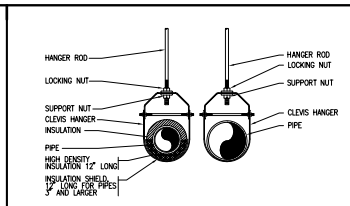


| HANGER ROD SCHEDULE | |
|---|---|
| PIPE SIZE | ROD SIZE |
| UP TO 2" | 3/8" DIA. |
| 2 1/2" THRU 3" | 1/2" DIA. |
| 4" AND 5" | 5/8" |
| 6" THRU 8" | 3/4" |
| 10" | 7/8" |

| HANGER ROD SPACING | |
|---|---|
| PIPE SIZE | MAX. ALLOWABLE SPACING |
| 1" | 7' |
| 1 1/4" | 8' |
| 1 1/2" | 9' |
| 2" | 10' |
| 2 1/2" | 11' |
| 3" THRU 8" | 12' |
| 10" & 12" | 14' |

3 PLUMBING PIPE HANGER INSTALLATION
SCALE: NTS

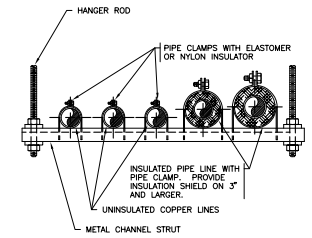


4 TRAPEZE PIPE HANGER
SCALE: NTS

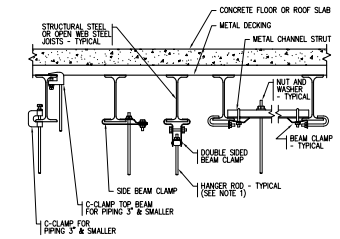


NOTE 1
REFER TO PIPE HANGER DETAIL FOR HANGER ROD SIZE. FOR CEILING SUSPENDED EQUIPMENT PROVIDE MIN. 3/8" DIA. HANGER ROD (REFER TO MANUFACTURERS INSTALLATION INSTRUCTIONS).

5 TYP METHODS OF SECURING HANGER RODS TO STEEL
SCALE: NTS

NOTE:
1. FIRESTOP SEALANTS AND PIPING PENETRATIONS THROUGH FIRE RATED ASSEMBLIES SHALL COMPLY WITH THE UL FIRE RESISTANCE DIRECTORY.

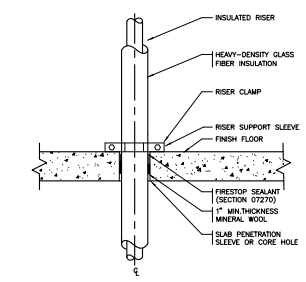


6 TYPICAL INSULATED PIPE SLAB PENETRATION SLEEVE DETAIL
SCALE: NTS

NOTE:
1. FIRESTOP SEALANTS AND PIPING PENETRATIONS THROUGH FIRE RATED ASSEMBLIES SHALL COMPLY WITH THE UL FIRE RESISTANCE DIRECTORY.

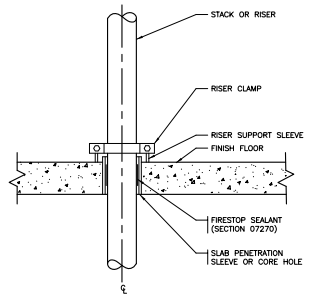


7 TYPICAL SLAB PENETRATION AND RISER SUPPORT SLEEVE
SCALE: NTS

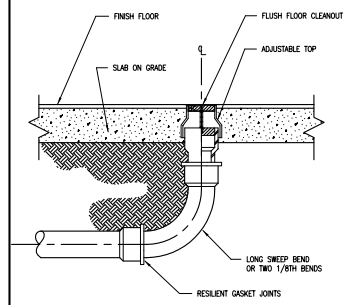


8 FLUSH FLOOR CLEANOUT
SCALE: NTS

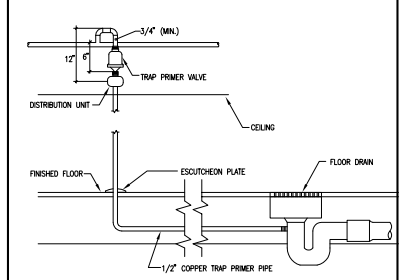


9 FLOOR DRAIN TRAP PRIMER DETAIL
SCALE: NTS

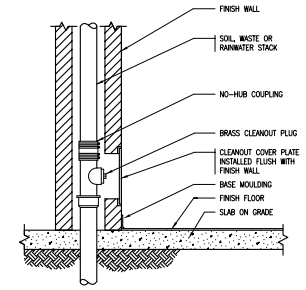


10 FLUSH WALL CLEANOUT
SCALE: NTS

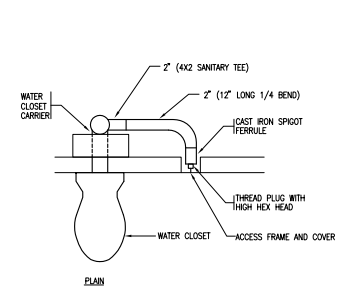


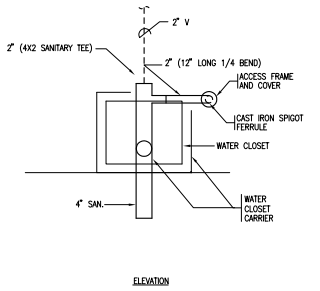


11 CLEANOUT AT WATER CLOSET
SCALE: NTS

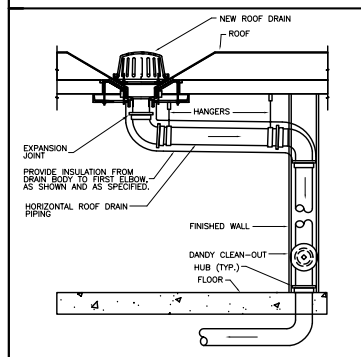


12 ROOF DRAIN PIPING CONNECTION DETAIL
SCALE: NTS

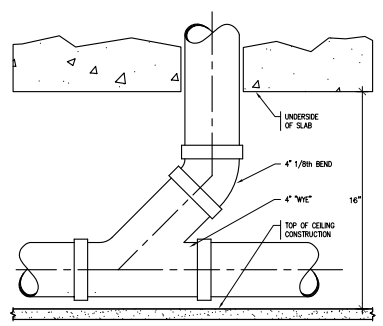


13 4" 1/8TH BEND AND "WYE" VERTICAL TO HORIZONTAL
SCALE: NTS

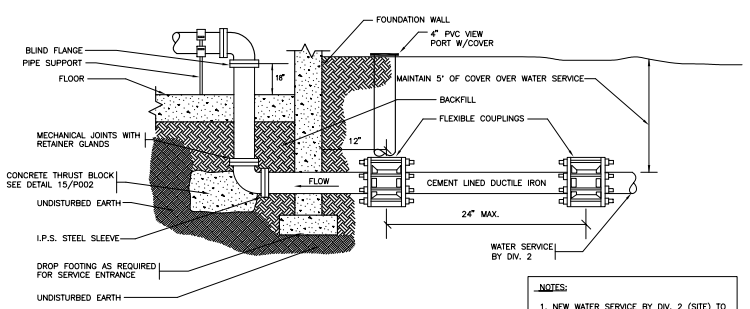


NOTES:
1. NEW WATER SERVICE BY DIV. 2 (SITE) TO 18" A.F.F. TO BLIND FLANGE.
2. ALL PIPE PENETRATION SHALL BE SEALED WATER TIGHT.

14 WATER SERVICE ENTRANCE DETAIL
SCALE: NTS

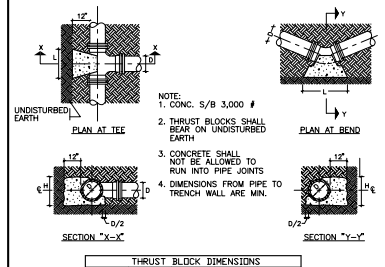


NOTE:
1. CONC. 5/8 3,000 #
2. THRUST BLOCKS SHALL BEAR ON UNDISTURBED EARTH
3. CONCRETE SHALL NOT BE ALLOWED TO RUN INTO PIPE JOINTS
4. DIMENSIONS FROM PIPE TO TRENCH WALL ARE MIN.

| THRUST BLOCK DIMENSIONS | | | | | | | | | |
|---|---|---|---|---|---|---|---|---|---|
| DIAMETER | TEE | | 1/4 BEND | | 1/8 BEND | | 1/16 BEND | | |
| D | H | L | H | L | H | L | H | L | |
| 3" & 4" | 1.0 | 3.0 | 2.0 | 2.0 | 1.0 | 2.0 | 1.0 | 1.0 | |

15 THRUST BLOCK DETAIL
SCALE: NTS

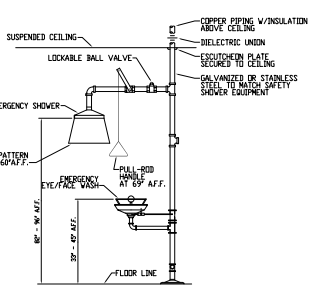


16 SAFETY SHOWER & EYEWASH DETAIL
SCALE: NTS

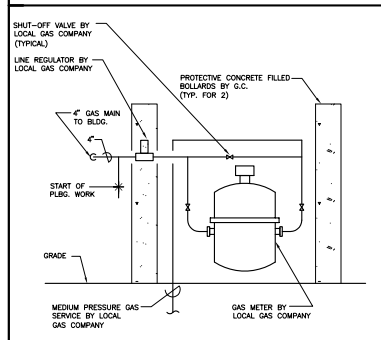


17 TYPICAL GAS SERVICE
SCALE: NTS

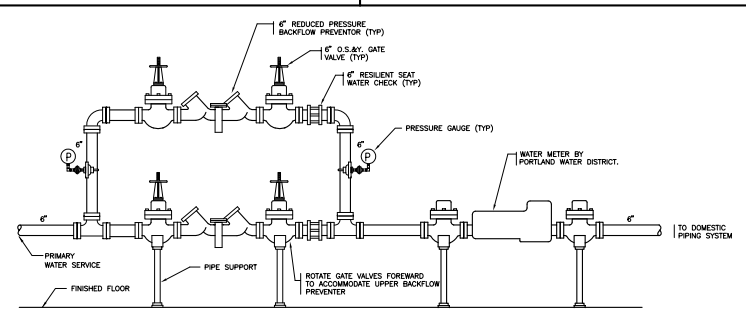


18 DUAL REDUCED PRESSURE BACKFLOW PREVENTERS
SCALE: NTS

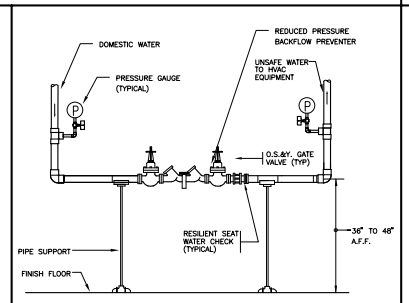


19 REDUCED PRESSURE BACKFLOW PREVENTER
SCALE: NTS

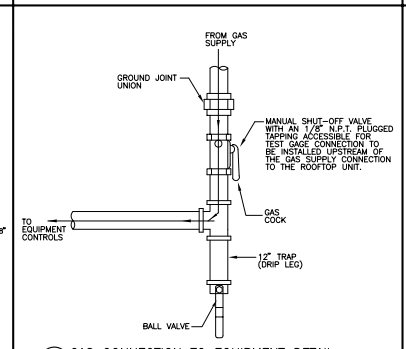


20 GAS CONNECTION TO EQUIPMENT DETAIL
SCALE: NTS

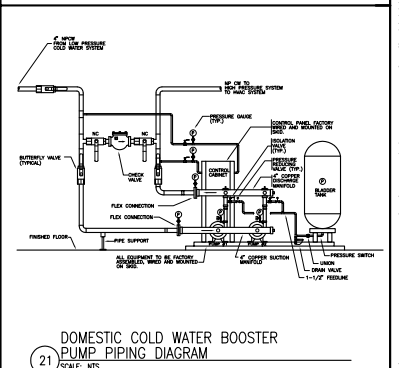


21 DOMESTIC COLD WATER BOOSTER PUMP PIPING DIAGRAM
SCALE: NTS

General Notes:

| MARK | ISSUE DATE | DESCRIPTION |
|---|---|---|
| PERMIT | 09/24/04 | PERMIT SET – NOT FOR CONSTRUCTION |

FOR PERMIT ONLY
NOT FOR CONSTRUCTION

Issue Log

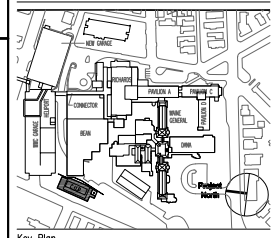


Key Plan

TRO
Architecture
Planning
Engineering
Interior Design
The Ritchie Organization
80 Bridge Street
Newton, MA 02465-1134
617-969-0400

Maine Medical Center
Central Utility Plant
Portland, Maine

Drawing Title
**PLUMBING DETAILS**

0" 0 0 0 0

| | | | |
|---|---|---|---|
| Commission No. | 4677 | Date Issued | |
| Scale | NTS | Sheet Number | |
| Drawn By | MLT | | |
| Approved By | RMH | | P300 |
| Filename | 4977P300 | | |

Copyright © 2004 The Ritchie Organization