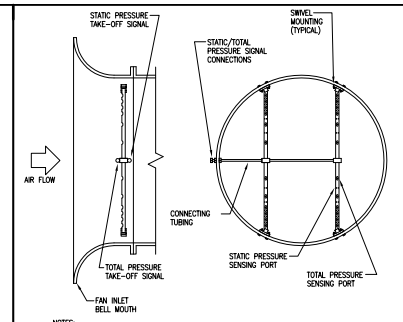

NOTES:
1. INSTALL IN ACCORDANCE WITH MANUFACTURERS RECOMMENDATIONS AND NFPA-90A.

X FAN INLET AIR FLOW STATION INSTALLATION DETAIL
SCALE: NTS

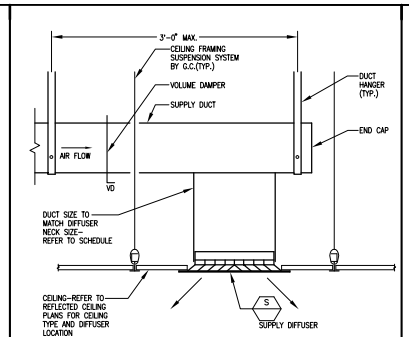

X TYPICAL SUPPLY DIFFUSER DETAIL
SCALE: NTS

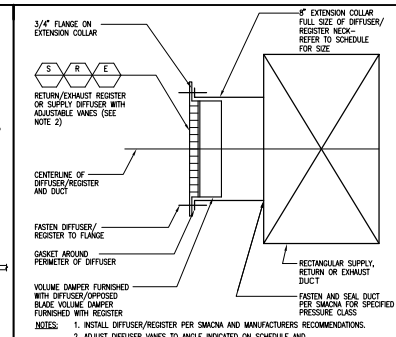

NOTES:
1. INSTALL DIFFUSER/REGISTER PER SMACNA AND MANUFACTURERS RECOMMENDATIONS.
2. ADJUST DIFFUSER VANES TO ANGLE INDICATED ON SCHEDULE AND MANUFACTURERS RECOMMENDATIONS.

X TYPICAL RECTANGULAR EXPOSED DUCT SUPPLY, RETURN/EXHAUST REGISTER DETAIL
SCALE: NTS

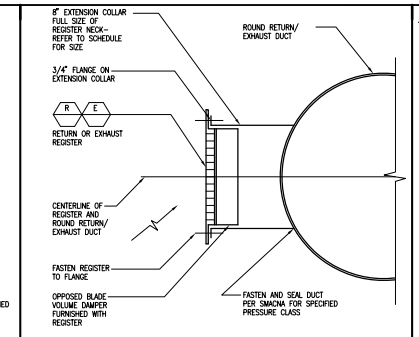

NOTE:
1. INSTALL REGISTER PER SMACNA AND MANUFACTURERS RECOMMENDATIONS.

X TYPICAL EXPOSED DUCT RETURN/EXHAUST REGISTER DETAIL
SCALE: NTS

NOTES:
FOR ROUND DUCT x = ONE DIAMETER
FOR SQUARE DUCT x = DUCT DIMENSION
FOR RECTANGULAR DUCT x = $\frac{\text{DUCT WIDTH + HEIGHT}}{2}$
FOR OVAL DUCT X = LARGEST DIMENSION

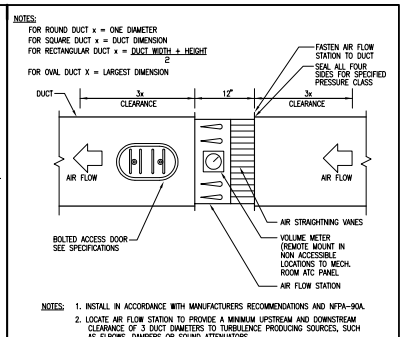

NOTES:
1. INSTALL IN ACCORDANCE WITH MANUFACTURERS RECOMMENDATIONS AND NFPA-90A.
2. LOCATE AIR FLOW STATION TO PROVIDE A MINIMUM UPSTREAM AND DOWNSTREAM CLEARANCE OF 3 DUCT DIAMETERS TO TURBULENCE PRODUCING SOURCES, SUCH AS ELBOWS, DAMPERS OR SOUND ATTENUATORS.

X AIR FLOW STATION INSTALLATION DETAIL
SCALE: NTS

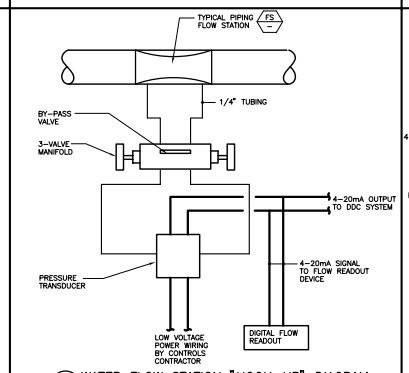

X WATER FLOW STATION "HOOK-UP" DIAGRAM
SCALE: NTS

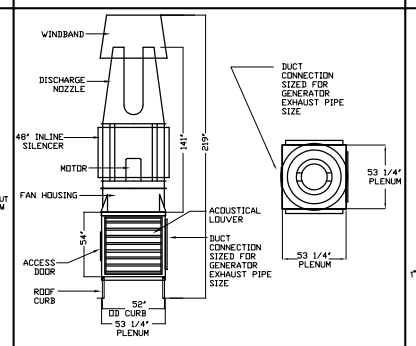

X EMERGENCY GENERATOR EXHAUST FAN INSTALLATION DETAIL (STROBIC FAN)
SCALE: NTS

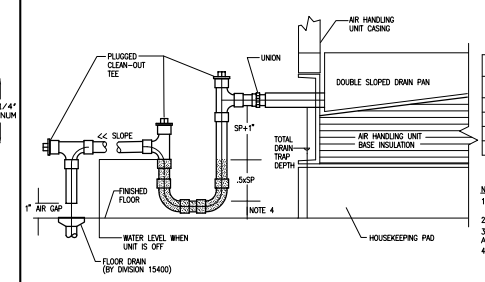

X AIR HANDLING UNIT COOLING COIL DRAIN TRAP DETAIL – DRAW THRU TYPE UNIT
SCALE: NTS

AIR HANDLING UNIT DRAIN TRAP SCHEDULE

ITEM	DRAIN SIZE	UNIT NEGATIVE PRESSURE	TOTAL DRAIN TRAP DEPTH	HOUSEKEEPING PAD HEIGHT
AHU-1	2"	3.5"	8.75"	N/A
AHU-2	1-1/2"	3.5"	8.5"	N/A

NOTES:
1. DRAIN LINE SIZE SHALL BE A MINIMUM OF THE UNIT DRAIN PAN CONNECTION OR THE SIZE INDICATED.
2. MANUALLY PRIME FILL DRAIN TRAP PRIOR TO START-UP OF AIR HANDLING UNIT.
3. THE "5P" DESIGNATION REFERS TO THE TOTAL NEGATIVE PRESSURE DEVELOPED IN THE AIR HANDLING UNIT.
4. NOMINAL DRAIN PIPE SIZE+1/2"

General Notes:

MARK	ISSUE DATE	DESCRIPTION
PERMIT	09/24/04	PERMIT SET – NOT FOR CONSTRUCTION

FOR PERMIT ONLY
NOT FOR CONSTRUCTION

Issue Log

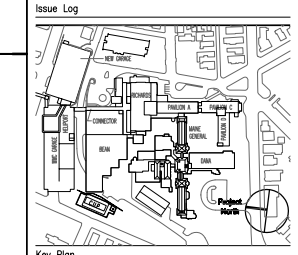

Key Plan

TRO
Architecture
Planning
Engineering
Interior Design
The Fitzhibbons Organization
83 Bridge Street
Hanover, MA 02339-1124
617-659-0400

Maine Medical Center
Central Utility Plant
Portland, Maine

Drawing Title
MECHANICAL-CENTRAL UTILITY PLANT TYPICAL DETAILS SHEET NO. 3

0' 0 0 0 0

Commission No.	4677	Date Issued	
Scale	NTS	Sheet Number	
Drawn By	MC		M603
Approved By	MC		
Filename	4677M601-603		

Copyright © 2004 The Fitzhibbons Organization