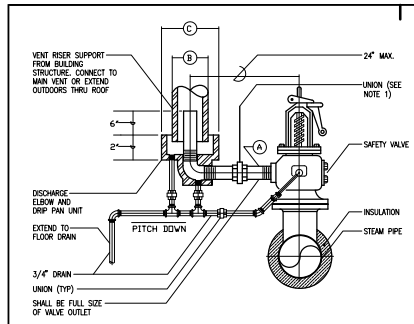

SAFETY VLV SIZE	PIPE A	PIPE B	PIPE C MIN.
1 1/2"	2 1/2"	3 1/2"	8 1/2"
2"	3"	4"	9 1/2"
2 1/2"	4"	6"	11"
3"	4"	6"	11"
4"	6"	8"	13 3/4"
6"	8"	10"	15"

NOTES:
1. OMIT UNION WHEN SAFETY VALVE IS PROVIDED WITH FLANGED CONNECTION.

X SAFETY VALVE AND DRIP PAN ELBOW DETAIL
SCALE: NTS

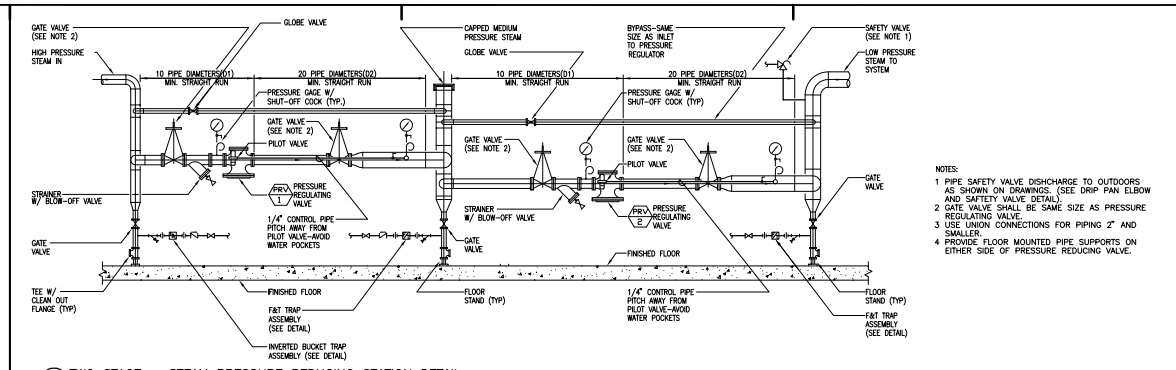

NOTES:
1. PIPE SAFETY VALVE DISHCHARGE TO OUTDOORS AS SHOWN ON DRAWINGS. (SEE DRIP PAN ELBOW AND SAFTEY VALVE DETAIL)
2. GATE VALVE SHALL BE SAME SIZE AS PRESSURE REGULATING VALVE.
3. USE UNION CONNECTIONS FOR PIPING 2" AND SMALLER.
4. PROVIDE FLOOR MOUNTED PIPE SUPPORTS ON EITHER SIDE OF PRESSURE REDUCING VALVE.

X TWO STAGE – STEAM PRESSURE REDUCING STATION DETAIL
SCALE: NTS

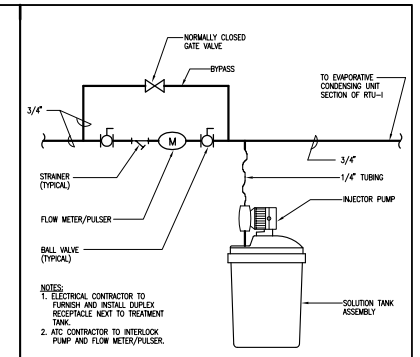

NOTES:
1. ELECTRICAL CONTRACTOR TO FURNISH AND INSTALL DUPLEX RECEPTACLE NEXT TO TREATMENT TANK.
2. ATC CONTRACTOR TO INTERLOCK PUMP AND FLOW METER/PULSER.

X CHEMICAL TREATMENT PIPING
SCALE: NTS

General Notes:

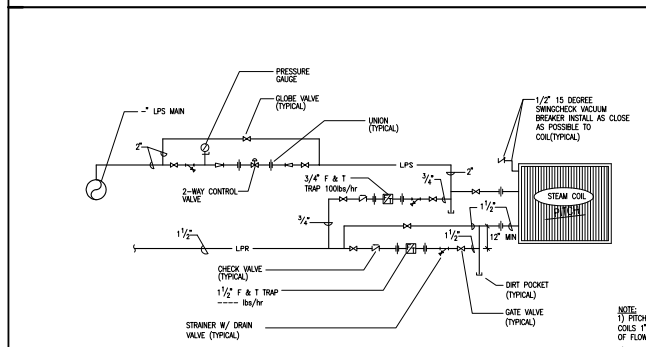

NOTE:
1) PITCH ALL PIPING TO & FROM COILS 1" IN 10'-0" IN DIRECTION OF FLOW.
2) PITCH COILS 1/4" PER FOOT TO RETURN CONNECTION.

X AIR HANDLING UNIT STEAM PREHEAT COIL PIPING SCHEMATIC
SCALE: NTS

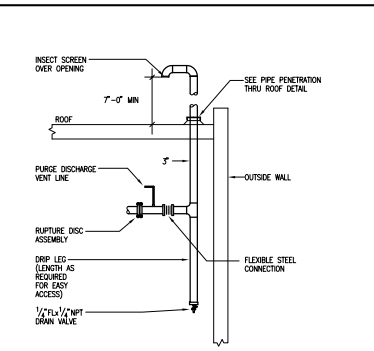

X REFRIGERANT VENT PIPING DETAIL
SCALE: NTS

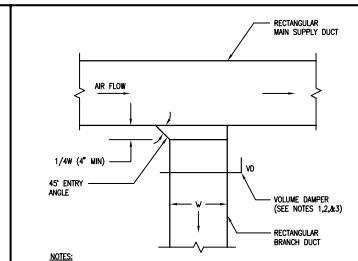

NOTES:
1. UP TO 1.5 SQ. FT. CROSS SECTIONAL AREA AND NOT EXCEEDING 24" IN WIDTH, USE SINGLE BLADE VOLUME DAMPER.
2. FOR CROSS SECTIONAL AREAS FROM 1.5 TO 3.0 SQ. FT. AND NOT EXCEEDING 24" IN WIDTH, USE 3 SINGLE BLADE VOLUME DAMPERS INDIVIDUALLY OPERATED TO FUNCTION IN AN OPPOSED MANNER.
3. FOR CROSS SECTIONAL AREAS GREATER THAN 3.0 SQ. FT. AND/OR EXCEEDING 24" IN WIDTH, USE GANG OPERATED OPPOSED BLADE VOLUME DAMPER AND FRAME ASSEMBLY.

X TYPICAL LOW PRESSURE RECTANGULAR SUPPLY DUCT TAKE-OFF DETAIL
SCALE: NTS

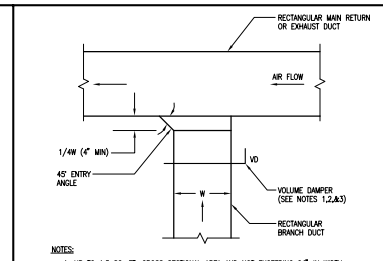

NOTES:
1. UP TO 1.5 SQ. FT. CROSS SECTIONAL AREA AND NOT EXCEEDING 24" IN WIDTH, USE SINGLE BLADE VOLUME DAMPER.
2. FOR CROSS SECTIONAL AREAS FROM 1.5 TO 3.0 SQ. FT. AND NOT EXCEEDING 24" IN WIDTH, USE 3 SINGLE BLADE VOLUME DAMPERS INDIVIDUALLY OPERATED TO FUNCTION IN AN OPPOSED MANNER.
3. FOR CROSS SECTIONAL AREAS GREATER THAN 3.0 SQ. FT. AND/OR EXCEEDING 24" IN WIDTH, USE GANG OPERATED OPPOSED BLADE VOLUME DAMPER AND FRAME ASSEMBLY.

X TYPICAL LOW PRESSURE RECTANGULAR RETURN/EXHAUST DUCT TAKE-OFF DETAIL
SCALE: NTS

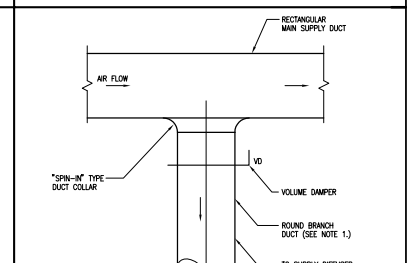

NOTE:
1. MAXIMUM ROUND DUCT SIZE SHALL BE 12"ø. REFER TO LOW PRESSURE RECTAGULAR SUPPLY DUCT TAKE-OFF DETAIL FOR BRANCH TAKE-OFFS GREATER THAN 12"ø.

X TYPICAL LOW PRESSURE RECTANGULAR TO ROUND SUPPLY DUCT TAKE-OFF DETAIL
SCALE: NTS

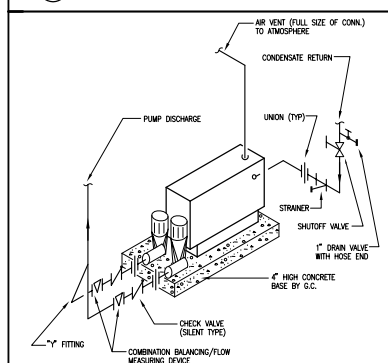

X CONDENSATE PUMP DETAIL
SCALE: NTS

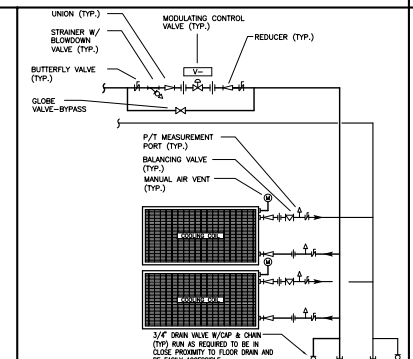

X CHILLED WATER COIL PIPING
SCALE: NTS

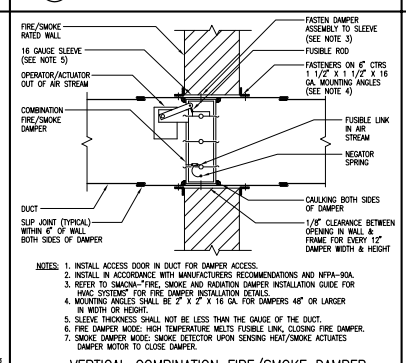

NOTES:
1. INSTALL ACCESS DOOR IN DUCT FOR DAMPER ACCESS.
2. INSTALL IN ACCORDANCE WITH MANUFACTURERS RECOMMENDATIONS AND NFPA-90A.
3. REFER TO SMACNA-"FIRE, SMOKE AND RADIATION DAMPER INSTALLATION GUIDE FOR HVAC SYSTEMS" FOR FIRE DAMPER INSTALLATION DETAILS.
4. MOUNTING ANGLES SHALL BE 2" X 2" X 16 GA. FOR DAMPERS 48" OR LARGER IN WIDTH OR HEIGHT.
5. SLEEVE THICKNESS SHALL NOT BE LESS THAN THE GAUGE OF THE DUCT.
6. FIRE DAMPER MODE: HIGH TEMPERATURE MELTS FUSIBLE LINK, CLOSING FIRE DAMPER.
7. SMOKE DAMPER MODE: SMOKE DETECTOR UPON SENSING HEAT/SMOKE ACTUATES DAMPER MOTOR TO CLOSE DAMPER.

X VERTICAL COMBINATION FIRE/SMOKE DAMPER INSTALLATION DETAIL
SCALE: NTS

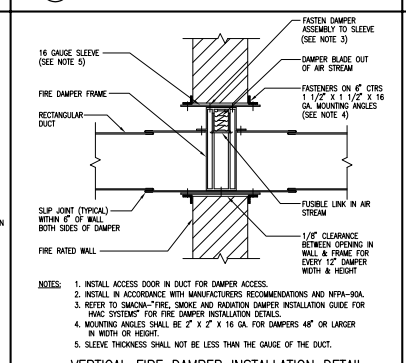

NOTES:
1. INSTALL ACCESS DOOR IN DUCT FOR DAMPER ACCESS.
2. INSTALL IN ACCORDANCE WITH MANUFACTURERS RECOMMENDATIONS AND NFPA-90A.
3. REFER TO SMACNA-"FIRE, SMOKE AND RADIATION DAMPER INSTALLATION GUIDE FOR HVAC SYSTEMS" FOR FIRE DAMPER INSTALLATION DETAILS.
4. MOUNTING ANGLES SHALL BE 2" X 2" X 16 GA. FOR DAMPERS 48" OR LARGER IN WIDTH OR HEIGHT.
5. SLEEVE THICKNESS SHALL NOT BE LESS THAN THE GAUGE OF THE DUCT.

X VERTICAL FIRE DAMPER INSTALLATION DETAIL LOW PRESSURE RECTANGULAR DUCT
SCALE: NTS

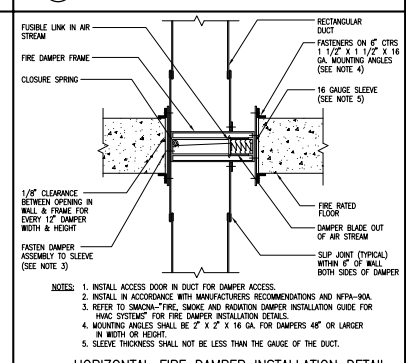

NOTES:
1. INSTALL ACCESS DOOR IN DUCT FOR DAMPER ACCESS.
2. INSTALL IN ACCORDANCE WITH MANUFACTURERS RECOMMENDATIONS AND NFPA-90A.
3. REFER TO SMACNA-"FIRE, SMOKE AND RADIATION DAMPER INSTALLATION GUIDE FOR HVAC SYSTEMS" FOR FIRE DAMPER INSTALLATION DETAILS.
4. MOUNTING ANGLES SHALL BE 2" X 2" X 16 GA. FOR DAMPERS 48" OR LARGER IN WIDTH OR HEIGHT.
5. SLEEVE THICKNESS SHALL NOT BE LESS THAN THE GAUGE OF THE DUCT.

X HORIZONTAL FIRE DAMPER INSTALLATION DETAIL LOW PRESSURE RECTANGULAR DUCT
SCALE: NTS

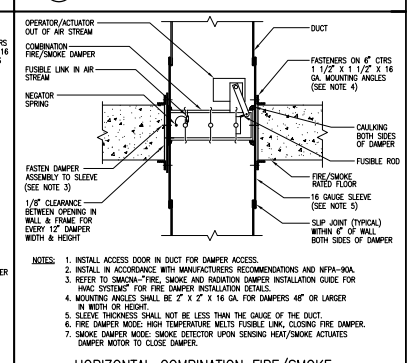

NOTES:
1. INSTALL ACCESS DOOR IN DUCT FOR DAMPER ACCESS.
2. INSTALL IN ACCORDANCE WITH MANUFACTURERS RECOMMENDATIONS AND NFPA-90A.
3. REFER TO SMACNA-"FIRE, SMOKE AND RADIATION DAMPER INSTALLATION GUIDE FOR HVAC SYSTEMS" FOR FIRE DAMPER INSTALLATION DETAILS.
4. MOUNTING ANGLES SHALL BE 2" X 2" X 16 GA. FOR DAMPERS 48" OR LARGER IN WIDTH OR HEIGHT.
5. SLEEVE THICKNESS SHALL NOT BE LESS THAN THE GAUGE OF THE DUCT.
6. FIRE DAMPER MODE: HIGH TEMPERATURE MELTS FUSIBLE LINK, CLOSING FIRE DAMPER.
7. SMOKE DAMPER MODE: SMOKE DETECTOR UPON SENSING HEAT/SMOKE ACTUATES DAMPER MOTOR TO CLOSE DAMPER.

X HORIZONTAL COMBINATION FIRE/SMOKE DAMPER INSTALLATION DETAIL
SCALE: NTS

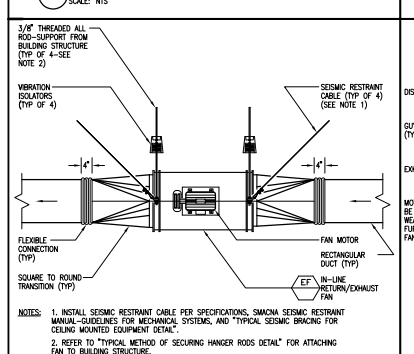

NOTES:
1. INSTALL SEISMIC RESTRAINT CABLE PER SPECIFICATIONS, SMACNA SEISMIC RESTRAINT MANUAL-GUIDELINES FOR MECHANICAL SYSTEMS, AND "TYPICAL SEISMIC BRACING FOR CEILING MOUNTED EQUIPMENT DETAIL".
2. REFER TO "TYPICAL METHOD OF SECURING HANGER RODS DETAIL" FOR ATTACHING FAN TO BUILDING STRUCTURE.

X INLINE CENTRIFUGAL RETURN/EXHAUST FAN INSTALLATION DETAIL
SCALE: NTS

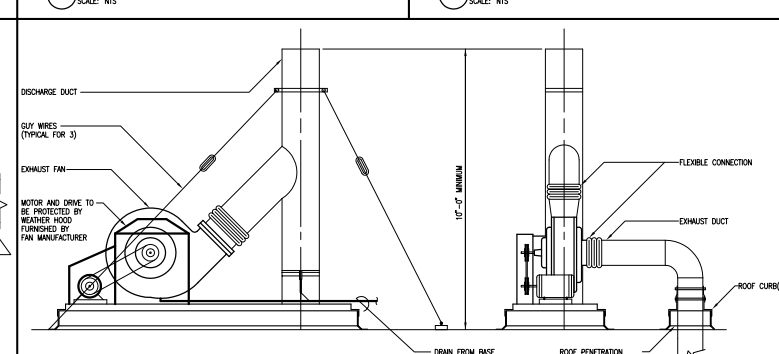

X ROOF EXHAUST FAN INSTALLATION DETAIL
SCALE: NTS

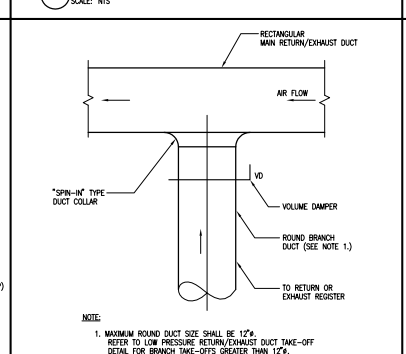

NOTE:
1. MAXIMUM ROUND DUCT SIZE SHALL BE 12"ø. REFER TO LOW PRESSURE RETURN/EXHAUST DUCT TAKE-OFF DETAIL FOR BRANCH TAKE-OFFS GREATER THAN 12"ø.

X TYPICAL LOW PRESSURE RECTANGULAR TO ROUND RETURN/EXHAUST DUCT TAKE-OFF DETAIL
SCALE: NTS

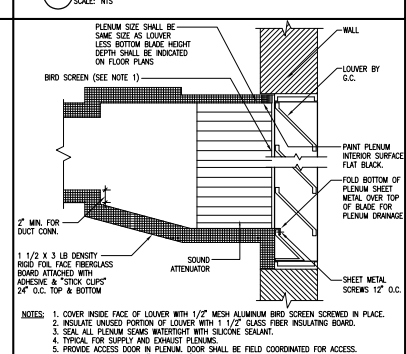

NOTES:
1. COVER INSIDE FACE OF LOUVER WITH 1/2" MESH ALUMINUM BIRD SCREEN SCREWED IN PLACE.
2. INSULATE UNUSED PORTION OF LOUVER WITH 1 1/2" GLASS FIBER INSULATING BOARD.
3. SEAL ALL PLENUM SEAMS WATERTIGHT WITH SILICONE SEALANT.
4. TYPICAL FOR SUPPLY AND EXHAUST PLENUMS.
5. PROVIDE ACCESS DOOR IN PLENUM. DOOR SHALL BE FIELD COORDINATED FOR ACCESS. DOOR SIZE SHALL BE 36" HIGH x 18" WIDE. REFER TO SPEC FOR DOOR CONSTRUCTION.

X INTAKE AND EXHAUST LOUVER INSTALLATION DETAIL
SCALE: NTS

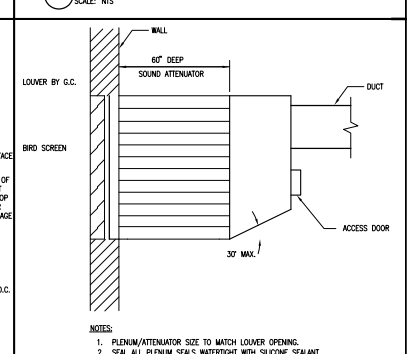

NOTES:
1. PLENUM/ATTENUATOR SIZE TO MATCH LOUVER OPENING.
2. SEAL ALL PLENUM SEALS WATERTIGHT WITH SILICONE SEALANT.
3. TYPICAL FOR SUPPLY AND EXHAUST PLENUMS.

X LOUVER PLENUM INSTALLATION DETAIL
SCALE: NTS

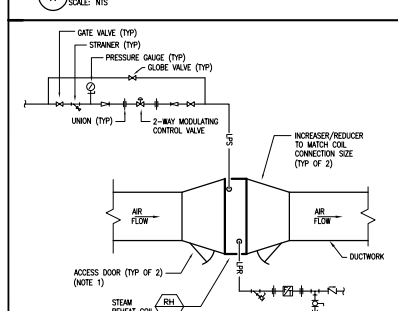

NOTES:
1. PROVIDE ACCESS DOORS UPSTREAM AND DOWNSTREAM OF REHEAT COIL TO FACILITATE CLEANING OF COIL.

X HOT WATER REHEAT COIL INSTALLATION DETAIL
SCALE: NTS

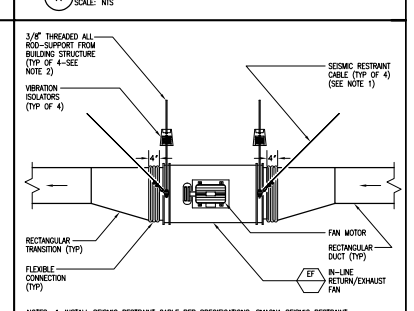

NOTES:
1. INSTALL SEISMIC RESTRAINT CABLE PER SPECIFICATIONS, SMACNA SEISMIC RESTRAINT MANUAL-GUIDELINES FOR MECHANICAL SYSTEMS, AND "TYPICAL SEISMIC BRACING FOR CEILING MOUNTED EQUIPMENT DETAIL".
2. REFER TO "TYPICAL METHOD OF SECURING HANGER RODS DETAIL" FOR ATTACHING FAN TO BUILDING STRUCTURE.

X INLINE CENTRIFUGAL RETURN/EXHAUST FAN INSTALLATION DETAIL
SCALE: NTS

MARK	ISSUE DATE	DESCRIPTION

FOR PERMIT ONLY
NOT FOR CONSTRUCTION

PERMIT	09/24/04	PERMIT SET - NOT FOR CONSTRUCTION

Issue Log

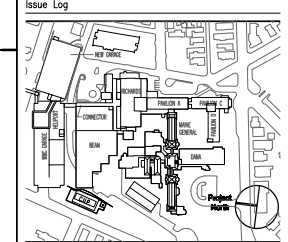

Key Plan

TRO
Architecture
Planning
Engineering
Interior Design
The Ritchie Organization
80 Bridge Street
Newton, MA 02465-1134
617-969-0400

Maine Medical Center
Central Utility Plant
Portland, Maine

Drawing Title
MECHANICAL-CENTRAL UTILITY PLANT TYPICAL DETAILS SHEET NO.2

0" 0 0 0 0

Commission No.	4677	Date Issued	
Scale	NTS	Sheet Number	
Drawn By	MC		M602
Approved By	MC		
Filename	467M601-603		

Copyright © 2004 The Ritchie Organization