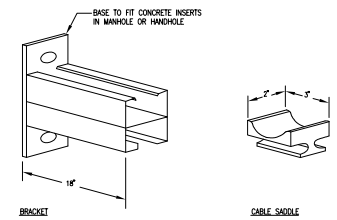

BRACKET CAPACITY FOR UNIFORM LOAD: 1,500 LBS. WITH 2-1/2 SAFETY FACTOR. PROVIDE TWO BRACKET ASSEMBLIES FOR INSERT.

PROVIDE THREE (3) CABLE SADDLES FOR EACH BRACKET ASSEMBLY.

SUITABLE FOR 3" MAX. CABLE DIA. MATERIAL: FIBER GLASS REINFORCED POLYESTER.

C1 MANHOLE CABLE RACK AND SADDLE DETAIL
SCALE: N.T.S.

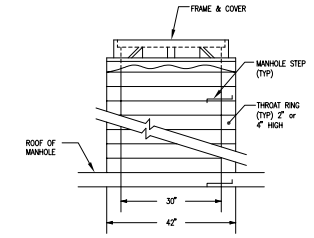

NOTE:
THROAT RINGS MAY BE EITHER PRECAST OR BRICK CONSTRUCTION.

D1 MANHOLE FRAME AND THROAT RING ASSEMBLY
SCALE: N.T.S.

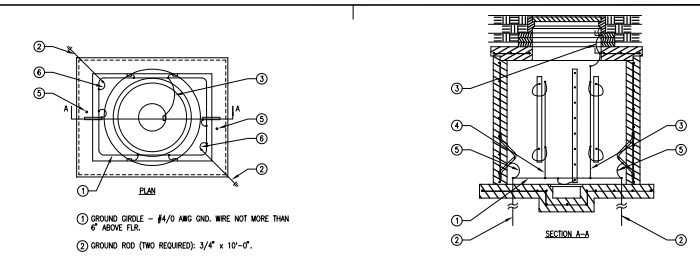

1. GROUND GIRDLE – #4/0 AWG GND. WIRE NOT MORE THAN 6" ABOVE FLR.
2. GROUND ROD (TWO REQUIRED): 3/4" x 10'-0".
3. DOWNLEAD–#4/0 AWG GND. WIRE TO CONNECT TO MANHOLE STEPS, LADDER MOUNTING BRACKET AND WITH PIGTAILS TO CABLE RACK INSERT (TYPICAL).
4. DOWNLEAD – #4/0 AWG GROUND WIRE CONNECTING THROUGH PIGTAILS TO CABLE RACK INSERT (TYPICAL).
5. #4/0 AWG GROUND WIRE CONNECTION TO PULLING EYE.
6. #4/0 AWG GROUND WIRE BETWEEN GROUND ROD AND GROUND GIRDLE.

NOTES:
1. MAKE CONNECTIONS TO HARDWARE WITH FUSION WELDSOR WITH APPROVED COMPRESSION LUGS.
2. ANCHOR CONDUCTORS TO MANHOLE SURFACES NO MORE THAN 24" O.C. W/ NO SLACK. PROVIDE 1/4" STANDOFFS.
3. INSTALL CONDUCTORS SO THAT THEY DO NOT INTERFERE WITH FUNCTION OF HARDWARE.

E1 TYPICAL MANHOLE GROUNDING SYSTEM
SCALE: N.T.S.

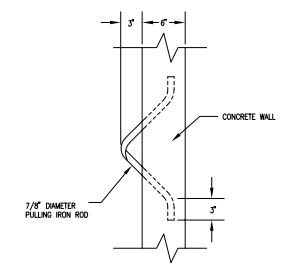

D2 CABLE PULLING IRON DETAIL
SCALE: N.T.S.

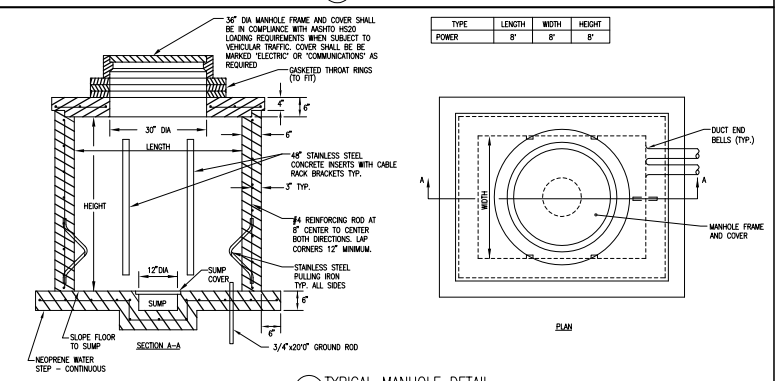

TYPE	LENGTH	WIDTH	HEIGHT
POWER	8'	8'	8'

E2 TYPICAL MANHOLE DETAIL
SCALE: N.T.S.

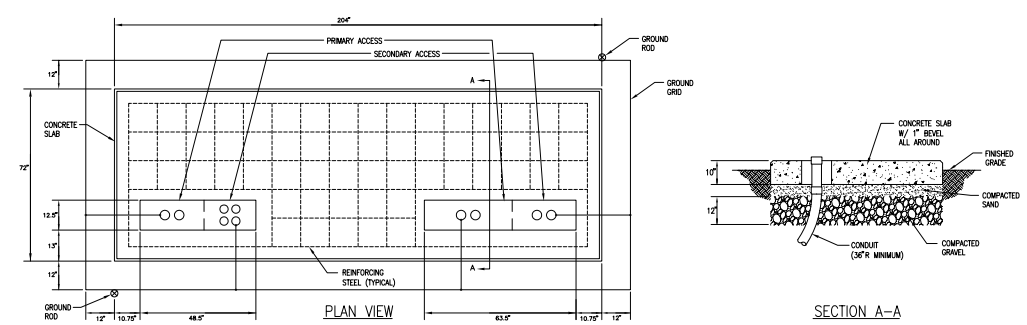

D3 CUP TRANSFORMER PAD NO. 1 DETAIL
SCALE: N.T.S.

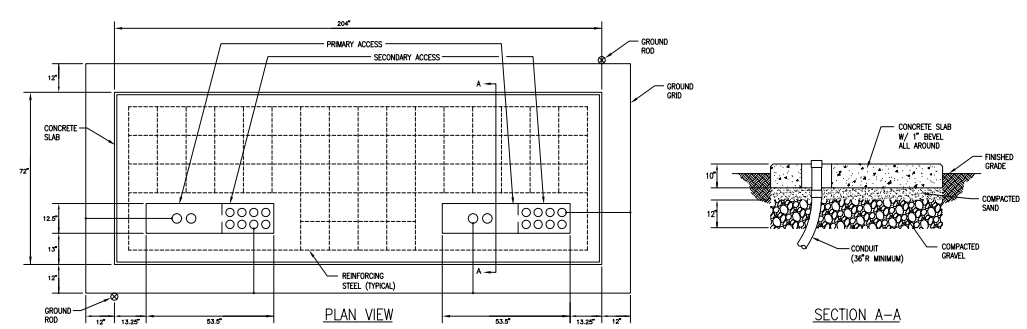

D3 CUP TRANSFORMER PAD NO. 2 DETAIL
SCALE: N.T.S.

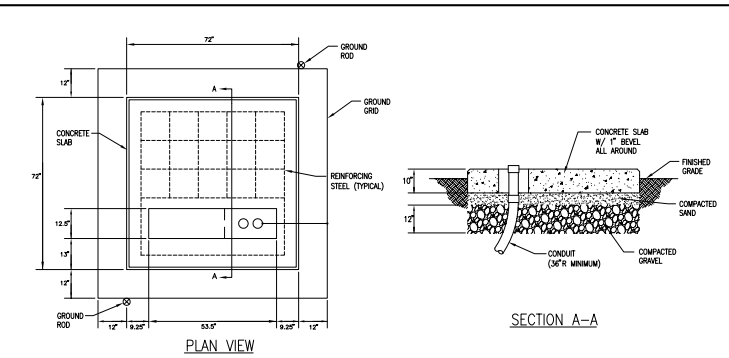

?? CUP TRANSFORMER PAD NO. 3 DETAIL
SCALE: N.T.S.

General Notes:

MARK	ISSUE DATE	DESCRIPTION
PERMIT	09/24/04	PERMIT SET – NOT FOR CONSTRUCTION

FOR PERMIT ONLY
NOT FOR CONSTRUCTION

Issue Log

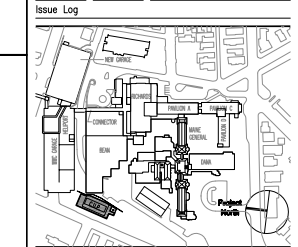

Key Plan

TRO
Architecture
Planning
Engineering
Interior Design
The Ritchie Organization
80 Bridge Street
Newton, MA 02458-1134
617-969-9400

Maine Medical Center
Central Utility Plant
Portland, Maine

Drawing Title
ELECTRICAL DETAIL SHEET 2

0' 0 0 0 0

Commission No.	4677	Date Issued	
Scale	NOAS NOTED	Sheet Number	
Drawn By	K.G.		
Approved By	D.A.B.		
Filename	4677E-DETAILS		

E801

Copyright © 2004 The Ritchie Organization