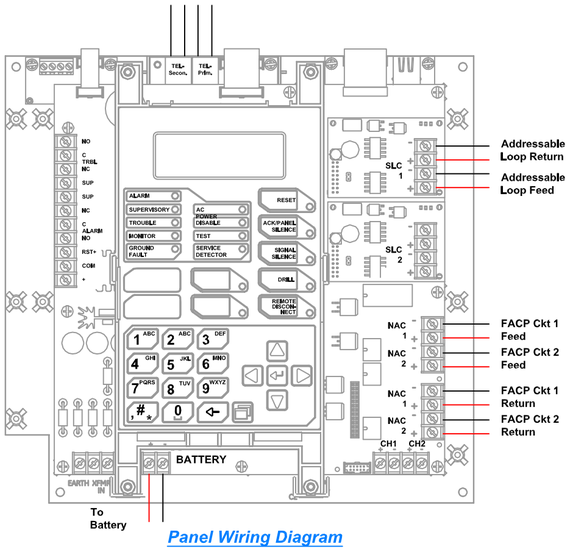

Panel Wiring Diagram

Click Here to Return to Bill of Material/Index

iO500 Addressable Fire Alarm System
IRIS Network
Portland, ME

BATTERY STANDBY CALCULATIONS - Fire Alarm Control Panel

QTY	Model #	Description	Quiescent Current	Alarm Current	Total Quiescent	Total Alarm
1	iO500	Base Panel	0.172000 *	0.297000 *	0.172000	0.297000 Amp
1	8A-232	Serial Communications Card	0.013000	0.020000	0.013000	0.020000 Amp
1	8A-DACT	Digital Communicator	0.041000	0.410000	0.041000	0.410000 Amp
1	RLCC/O	Remote Annunciator	0.089000	0.119000	0.089000	0.119000 Amp
14	G1RF-VM	Strobe only Unit (1Ea/15 candela)	0.000000	0.139000	0.000000	1.946000 Amp
7	G1RF-HDVM	Horn/Strobe Unit (15 candela)	0.000000	0.099000	0.000000	0.693000 Amp
1	G1RF-HDVM	Horn/Strobe Unit (30 candela)	0.000000	0.139000	0.000000	0.139000 Amp
7	G1RF-HDVM	Horn/Strobe Unit (30 candela)	0.000000	0.139000	0.000000	1.391000 Amp
8	D1RF-VM	Strobe Unit (15 candela)	0.000000	0.271000	0.000000	0.388000 Amp
1	4098-1280R	Exterior Strobe Beacon	0.000000	0.350000	0.000000	0.350000 Amp
				Total	0.315	3.515 Amp

Total Quiescent x Time Required (24 Hours): 7.6 Ah
Total Alarm x Time Required (5 Minutes): 0.44531197 Ah
Total Battery Required: 8.04531197 Ah
Total Battery Required (+) 25% Spare Capacity: 9.3915 Ah
Battery Supplied: 12 Ah

* Includes (10) Fully loaded SLC loops (250 devices)
Actual load = 38 devices (25.6% loops capacity)

Click Here to Return to Bill of Material/Index

IRIS Network - Portland
Booster Power Supply Standby Battery Calculations

Strobe Booster Panel (BPS10A)																																			
	D1RF-HDVM Horn/Strobe (30cd)									G1RF-VM Strobe (30cd)								40mA		Quiescent Current	Alarm Current	Remaining % of Std Capacity
	15cd	30cd	75cd	110cd						15cd	30cd	75cd						n/a				
	39	139	183	248						71	99	158						350				
Panel																				0.0700		
Circuit 1	4			5						2											1.4350	31.37 %
Circuit 2	8	1	7							4											1.9800	35.00 %
Circuit 3																					0.0000	100.00 %
Circuit 4																					0.0000	100.00 %
																				0.2799	3.3799	48.02 %
																				Total Quiescent	Total Alarm	Remaining % of Panel

All currents are expressed as mA.
Max current per ckt = 2.0 Amps. Max current per panel = 3.5 Amps.

Total Quiescent Amp x Time Required (24 Hours): 1.882 Amp-H
Total Alarm Amp x Time Required (5 Minutes): 0.282 Amp-H
Total Battery Required: 1.882 Amp-H
Total Battery Required + 25%: 2.354 Amp-H
Battery Supplied: 7.0 Amp-H

NAC Circuit Voltage Drop/Maximum Length Calculations

Formulas Used: Rs = (D) x (Rw) / 1000'
Vs = (Rt) x (I)
Substitute for (Rt) and solve for D
D = ((4.0) x (1000')) / ((Rw) x (I))

Notes:
1 NAC Circuit terminal voltage 24Vdc.
2 A maximum allowable voltage drop of 4Vdc will provide a minimum of 20 Vdc per circuit.
3 Current values listed per device are based on 24Vdc.

Rs = Total Circuit Resistance
D = Total Circuit Length (Feet)
Rw = Wire Resistance (Ω) per 1000' Pair (Ohms)
Vo = Circuit Voltage Drop (Max allowed is 4.0Vdc)
I = Total Circuit Current

	D1RF-HDVM Horn/Strobe (30cd)									G1RF-VM Strobe (30cd)								40mA	Total Circuit Current	Ω per 1000' Pair	
	15cd	30cd	75cd	110cd						15cd	30cd	75cd						n/a		12AWG (3.3)	14AWG (2.1)
	39	139	183	248						71	99	158						350			
Circuit 1	4	0	5	0	0	2	0	0	0										1.1750	989.34 Ft	622.44 Ft
Circuit 2	8	1	7	0	0	4	0	0	0	1.9200	0.0000	0.0000	0.0000	0.0000	0.0000	0.0000	0.0000	0.0000	1.9200	989.34 Ft	400.84 Ft
Circuit 3	0	0	0	0	0	0	0	0	0	0.0000	0.0000	0.0000	0.0000	0.0000	0.0000	0.0000	0.0000	0.0000	0.0000	#DIV/0! Ft	#DIV/0! Ft
Circuit 4	0	0	0	0	0	0	0	0	0	0.0000	0.0000	0.0000	0.0000	0.0000	0.0000	0.0000	0.0000	0.0000	0.0000	#DIV/0! Ft	#DIV/0! Ft

Click Here to Return to Bill of Material/Index

IRIS Network - Portland
NAC Circuit Voltage Drop/Maximum Length Calculations*

Formulas Used: Rs = (D) x (Rw) / 1000'
Vs = (Rt) x (I)
Substitute for (Rt) and solve for D
D = ((4.0) x (1000')) / ((Rw) x (I))

Notes:
1 NAC Circuit terminal voltage 24Vdc.
2 A maximum allowable voltage drop of 4Vdc will provide a minimum of 20 Vdc per circuit.
3 Current values listed per device are based on 24Vdc.

Rs = Total Circuit Resistance
D = Total Circuit Length (Feet)
Rw = Wire Resistance (Ω) per 1000' Pair (Ohms)
Vo = Circuit Voltage Drop (Max allowed is 4.0Vdc)
I = Total Circuit Current

	D1RF-HDVM Horn/Strobe (30cd)									G1RF-VM Strobe (30cd)								40mA	Total Circuit Current	Ω per 1000' Pair	
	15cd	30cd	75cd	110cd						15cd	30cd	75cd						n/a		12AWG (3.3)	14AWG (2.1)
	39	139	183	248						71	99	158						350			
Circuit 1	3		3			3													1.1850	993.97 Ft	942.10 Ft
Circuit 2	4	1	4																1.2330	998.39 Ft	993.87 Ft
Circuit 3																		1	0.3500	993.31 Ft	1197.80 Ft
Circuit 4																				Ft	Ft

* Power provided by Fire Alarm Panel - See FACP Battery Backup Calculations for further information.

Click Here to Return to Bill of Material/Index

BST Addressable Fire Alarm System
IRIS Network
Portland, Maine

SEQUENCE OF OPERATION MATRIX

System Inputs	A Alarm Signal to Central Fire Department via Radio Master Box	B Activate Exterior Beacon	C Announcate at Fire Alarm Control Panel	D Activate Evacuation Sequence	E Shutdown Associated HVAC Unit & Associated Mechanical Equipment	F Shunt Trip Elevator	G Recall Elevator to Appropriate floor	H Record Event in Memory	I Supervisory Signal to Central Station via Digital Communicator (DACT)	J Trouble Signal to Central Station via Digital Communicator (DACT)	System Inputs
System Waterflow	X	X	X	X				X			System Waterflow
System Tamper Switch			X					X	X		System Tamper Switch
Elev Smoke Detector	X	X	X	X			X	X		X	Elev Smoke Detector
Elev Heat Detector	X	X	X	X		X		X			Elev Heat Detector
Manual Pull Station	X	X	X	X				X			Manual Pull Station
Area Smoke Detector	X	X	X	X				X			Area Smoke Detector
Duct Smoke Detector			X		X			X	X		Duct Smoke Detector
Fire Alarm - AC Failure			X							X	Fire Alarm - AC Failure
Fire Alarm - Low Battery			X							X	Fire Alarm - Low Battery
Signal Line Open Circuit			X							X	Signal Line Open Circuit
Signal Line Ground Fault			X							X	Signal Line Ground Fault
Horn/Strobe Circuit Open			X							X	Horn/Strobe Circuit Open
Horn/Strobe Circuit Ground			X							X	Horn/Strobe Circuit Ground
Fire Pump AC Fail			X							X	Fire Pump AC Fail
System Ground Fault			X							X	System Ground Fault
	A	B	C	D	E	F	G	H	I	J	

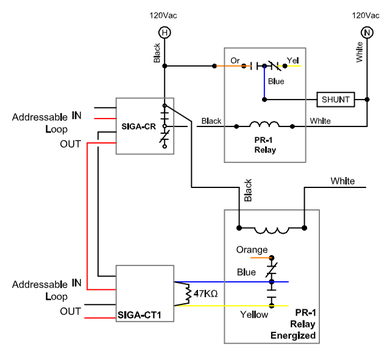

Elevator Shunt Trip Connection Detail
(SIGA-CR shown De-energized. Activation of CR activates Shunt Trip)

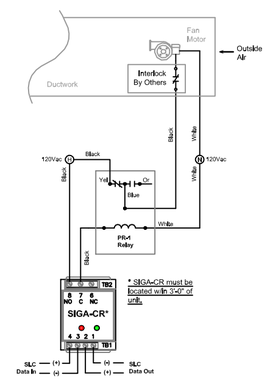

Typical AHU Control Connection Detail

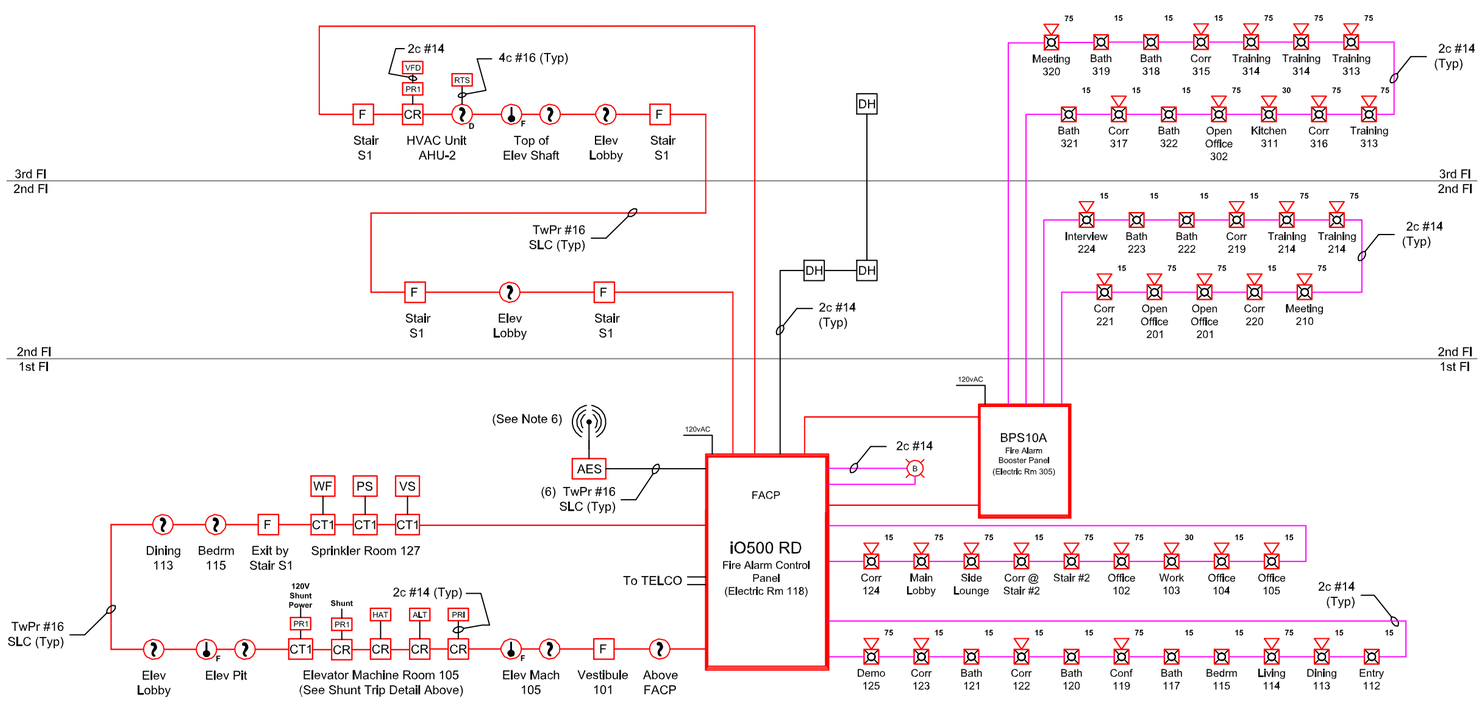

Reviewed for Code Compliance Inspections Division Approved with Conditions	Date: 01/13/15

DWG NAME: **The IRIS Network 189 Park Avenue Portland, Maine Fire Alarm Riser Diagram**

DWG No: **86537.FA**

JOB NAME: **The IRIS Network 189 Park Avenue Portland, Maine Fire Alarm Riser Diagram**

Contractor: **Don's Electric**

REV.	DESCRIPTION	DATE	DRWN:	RVW'D:
0	Original Issue	12/14		

SCALE: NTS

PO No. 86537

The IRIS Network
189 Park Ave. Portland
Fire Alarm Riser Diagram

DWG NO. 86537.FA-001

RISER DIAG SYM	CONTRACT DWG SYM	NFPA SYMBOL*	DESCRIPTION	CATALOG #
FACP	FACP	FACP	Fire Alarm Control Panel (Existing)	EST IO500RD
BPS		FACU	Addressable Manual Pull Station	SIGA-278
F	F	P	Addressable Relay Control Module	SIGA-CR
S	S	S	Addressable Smoke Detector w/ Base	SIGA2-PS / SIGA-SB
H	H	H	Addressable Heat Detector w/ Base	SIGA2-HFS / SIGA-SB
D	D	D	Addressable Duct Smoke Detector w/ Sampling Tube	SIGA2-SD
RTS	RTS	RTS	Remote Test and Indicating Station	SD-TRK
CT1		IM	Addressable Single Input Module	SIGA-CT1
CC1S	CC1S	COM	Addressable Synchronization Module	SIGA-CC1S
CR	CR	COM	Addressable Relay Control Module	SIGA-CR
DH	DH		Door Holdback	FBO
PR1		R	Intermediate Auxiliary Relay	System Sensor
WF	FS	WF	Waterflow Switch (Furnished by Others)	FBO
PS	PS	PS	Pressure Switch (Furnished by Others)	FBO
VS	TS	VS	Tamper Switch - Valve Supervisory (Furnished by Others)	FBO
#	H	#	Horn/Strobe Unit - Red Wall Mount (# Indicates Candela)	G1RF-HDVM
#		#	Strobe Only Unit - Red Wall Mount (# Indicates Candela)	G1RF-VM
AES			Subscriber Unit Radio Box w/ Accessories	AES

*NFPA 170 (2009)
Tables: 6.5, 6.7.1, 6.7.2, & 6.7.3

GENERAL NOTES:

1. ALL WIRING IN ACCORDANCE WITH NATIONAL ELECTRIC CODE, STATE OF MAINE BUILDING CODE (IBC), LOCAL AUTHORITY HAVING JURISDICTION, AND MANUFACTURER'S REQUIREMENTS AND RECOMMENDATIONS.

WIRING NOTES:

1. ALL ADDRESSABLE DEVICES MUST BE INSTALLED IN A HEATED LOCATION.
2. ADDRESSABLE CONTROL RELAYS (CR or MCR) SHALL SWITCH ONLY 12/24V (AC / DC) @ 2.0 Amps OR 120Vac as PILOT DUTY ONLY. SWITCHED CIRCUITS REQUIRING HIGHER VOLTAGE SHALL USE AN INTERMEDIATE RELAY LISTED FOR THE PURPOSE.
3. Network Data consists of: (1) Twisted NON-Shielded #16 Pair from FACP to Annunciator and (1) Twisted NON-Shielded #16 Pair return to FACP. Maintain proper separation between feeds and returns.
4. Addressable Loop (SLC) consists of: (1) Twisted NON-Shielded #16 Pair from FACP to 1st device, (1) Twisted NON-Shielded #16 Pair through remaining devices on circuit and return to FACP. Maintain proper separation between feeds and returns.
5. Horn/Strobe circuits consist of a minimum: 2c #14 from Fire Alarm Control Panel or Booster Panel to 1st device, 2c #14 through remaining devices on circuit and end at End of Line Resistor. Unless noted, all strobes shall be 15/75 candela rated.
6. Refer to AES Radio Box installation manual, the supplemental information provided with the submittal, and the City of Portland standards (Dick Andrews).

iO500 Addressable Fire Alarm System
IRIS Network
189 Park Avenue
Portland, Maine

Click Here to Return to Bill of Material/Index

System Narrative

In the event of an alarm from an actuated device, the following shall occur: (Devices reporting an alarm: Manual Station, Smoke, Heat Detector, Waterflow)

1) Notify Portland Fire Department via Radio Masterbox.

2) Annunciate audibly, visually, and in plain English the active initiating device at the fire alarm control panel.

3) Sound a Code 3 Temporal on all Horn Circuits

4) Flash all strobe appliance circuits in a synchronized manner

5) Shutdown air handler unit if applicable

6) If a smoke detector designated for elevator recall activates the elevator shall recall to appropriate floor. If a heat detector designated for elevator shunt activates the elevator shall shunt trip.

In the event of a supervisory condition from an actuated device, the following shall occur: (Devices reporting an Supervisory: Duct Smoke Detector, Sprinkler Tamper Switch)

1) Annunciate audibly, visually, and in plain English the active initiating device at the fire alarm control panel.

2) Notify central monitoring station

3) Shutdown associated HVAC Unit

In the event of a system trouble report, the following shall occur:

1) Annunciate audibly, visually, and in plain English the active initiating device at the fire alarm control panel.

2) Notify central monitoring station

Click Here to Return to Bill of Material/Index