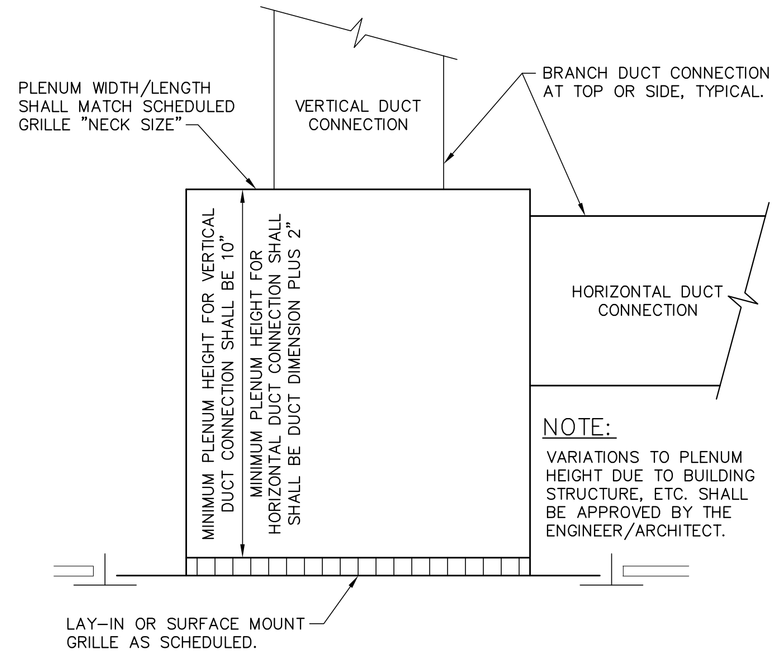

F1	EXHAUST AIR REGISTER BOOT DETAIL
NTS	

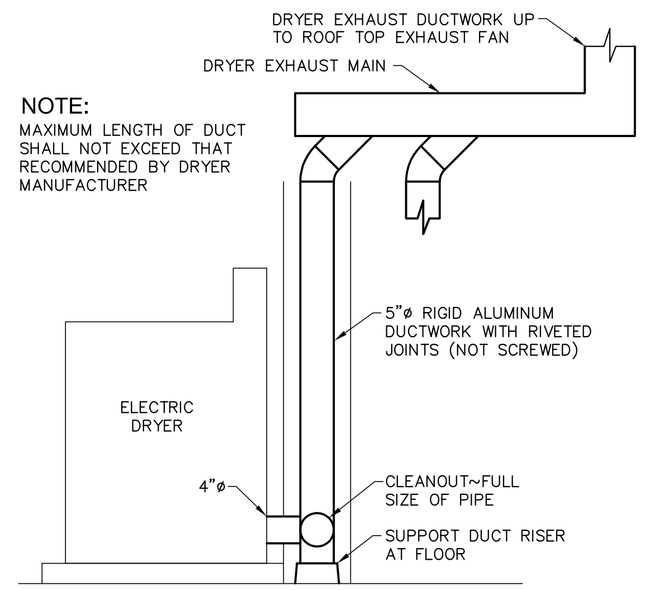

F3	CLOTHES DRYER VENTING DETAIL
NTS	

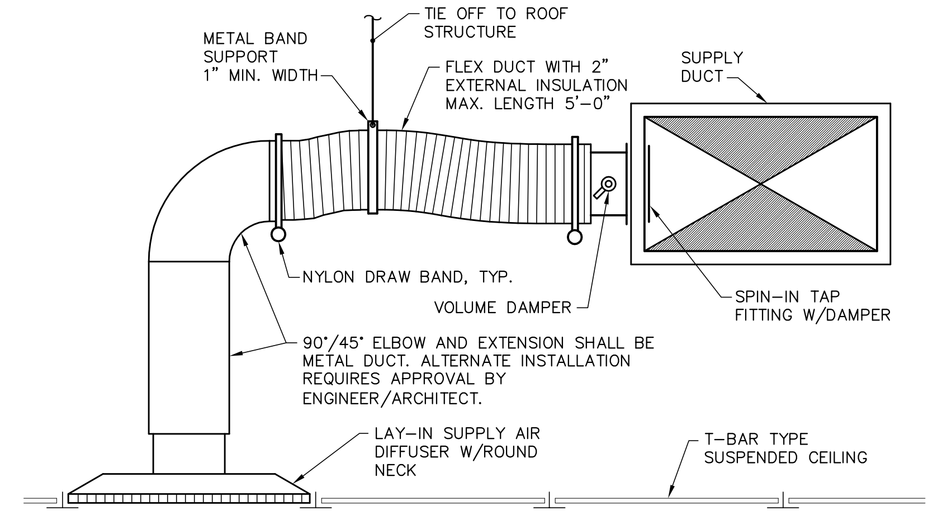

F5	SUPPLY AIR BRANCH CONNECTION
NTS	

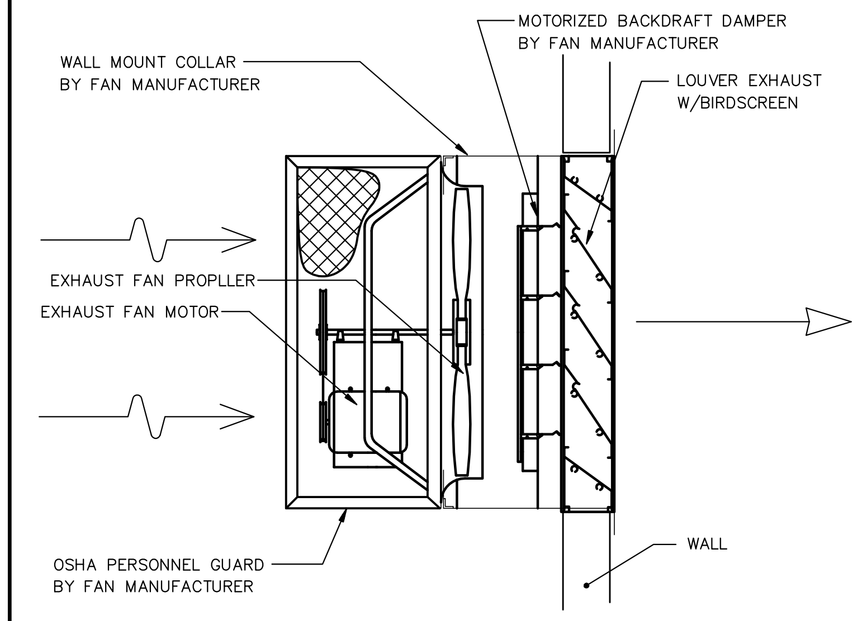

F8	PROPELLER FAN DETAIL
NTS	

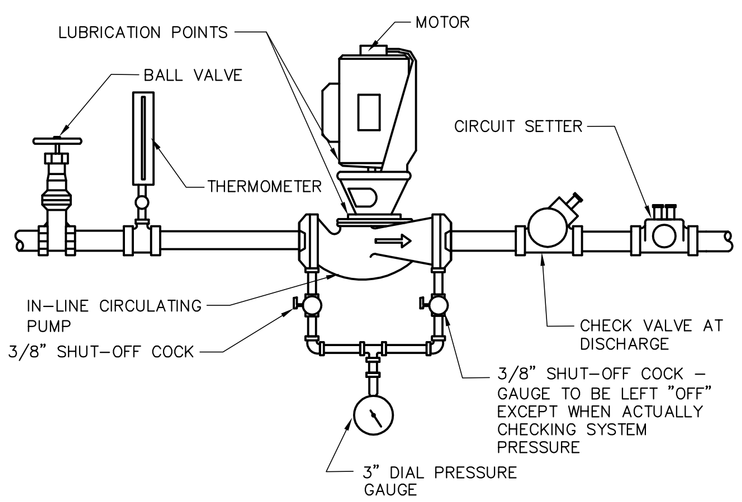

D1	CIRCULATING PUMP PIPING DETAIL
NTS	

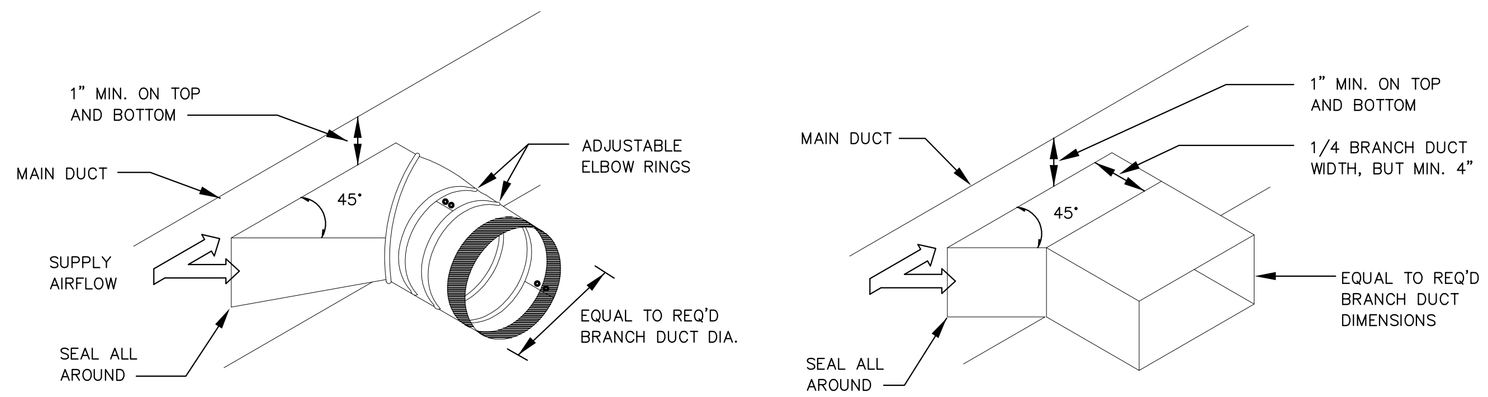

D3	TYPICAL BRANCH TAKE-OFF FITTINGS
NTS	

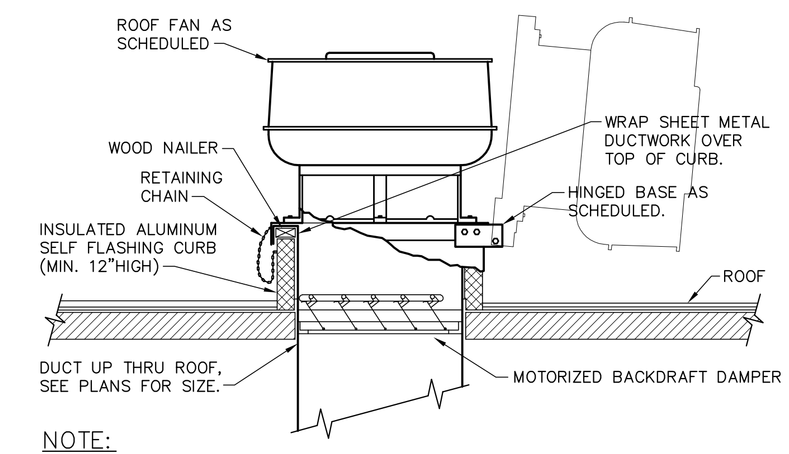

NOTE:

1. SEE ARCHITECTURAL DRAWINGS FOR ROOF CURB FLASHING DETAILS.

D8	ROOF TOP EXHAUST FAN DETAIL
NTS	

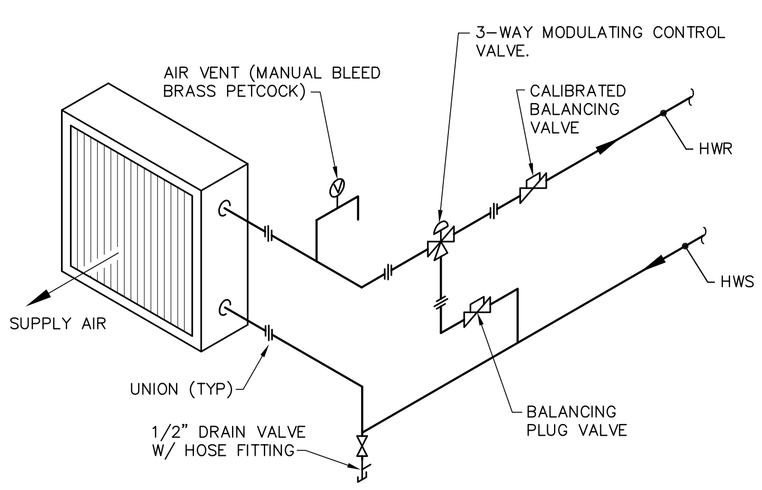

A1	HOT WATER COIL PIPING DETAIL
NTS	

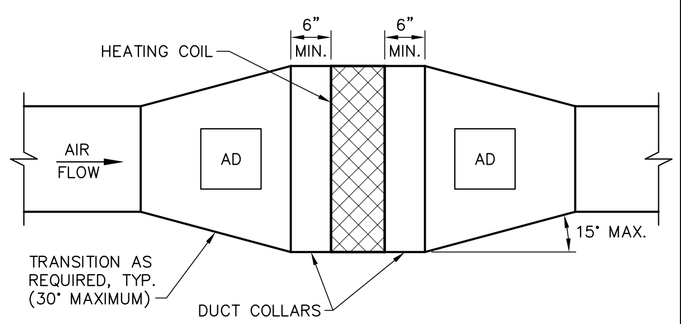

A3	HOT WATER COIL DUCTWORK DETAIL
NTS	

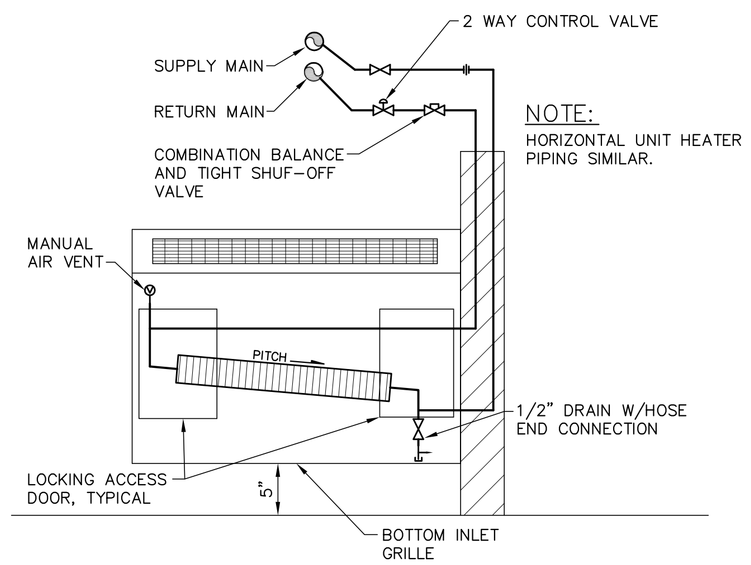

95% REVIEW

25 FEB 2005

A5	CONVECTOR/CABINET UNIT HEATER PIPING DOWNFEED DETAIL
NTS	

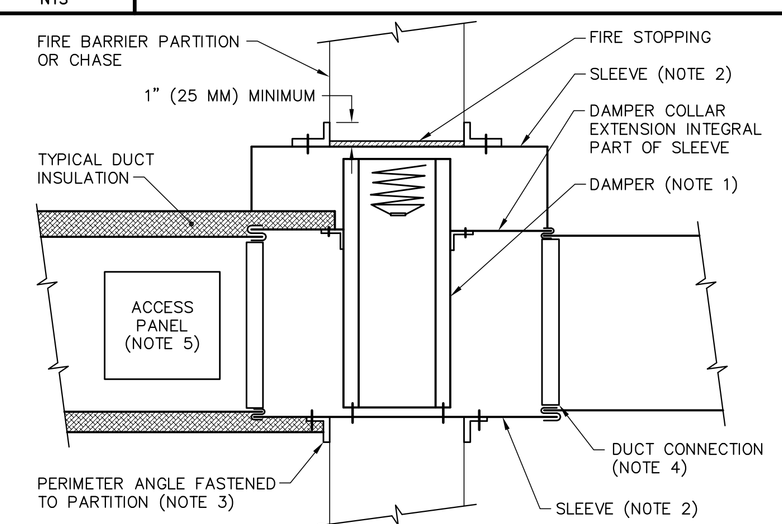

NOTES:

1. A VERTICAL DAMPER IS SHOWN. HORIZONTAL DAMPER INSTALLATION IS SIMILAR, FOLLOW MANUFATURER'S INSTRUCTIONS, INCLUDING FASTENER OPTIONS AND GAGES FOR SLEEVE AND PERIMETER ANGLES. FIRE DAMPERS MUST BE INSTALLED IN THE PARTITION OR FLOOR AND NOT OUTSIDE THE PENETRATION.

2. GALVANIZED SLEEVE: GAGE NOT LESS THAN CONNECTING DUCT. FASTEN SLEEVE TO DAMPER FRAME AND TO PERIMETER ANGLES.

3. PERIMETER ANGLES: GALVANIZED STEEL, NOT LESS THAN 1-1/2" x 1-1/2" (40x40 MM), 14 GAGE, TO PROVIDE 1" (25 MM) MINIMUM OVERLAP OF OPENING ON ALL 4 SIDES.

4. BREAKAWAY DUCT CONNECTION: CONTRACTOR'S OPTION OF TYPES SHOWN IN SMACNA LPDS, FIG. 2-13, SEAL JOINTS.

5. ACCESS PANELS: SIZE AND LOCATION TO PERMIT SERVICING THE FUSIBLE LINK OR LINKS.

A8	SECTION THRU TYPICAL FIRE DAMPER DETAIL
NTS	

ARCHITECT:
SEMPLE & DRANE ARCHITECTS
496 CONGRESS STREET
PORTLAND, MAINE 04101
TEL:(207) 761-4231 FAX:774-0152
sda@sempledrane.com

ENGINEERING:
allied engineering, inc.
Telephone No: 207-854-8139 • Fax No: 207-854-8303
E-Mail: info@alliedeng.com • www.alliedeng.com

OWNER:
IRIS NETWORK
PORTLAND, MAINE 04101

PROJECT:
IRIS PARK APARTMENTS
RENOVATION & ADDITIONS
PORTLAND, MAINE 04101

DRAWING:
MECHANICAL DETAILS

REVISIONS:

SCALE: AS NOTED
CAD FILE: 03066M.DWG
DATE: 2-25-05

SHEET:
MH-500

2-25-2005