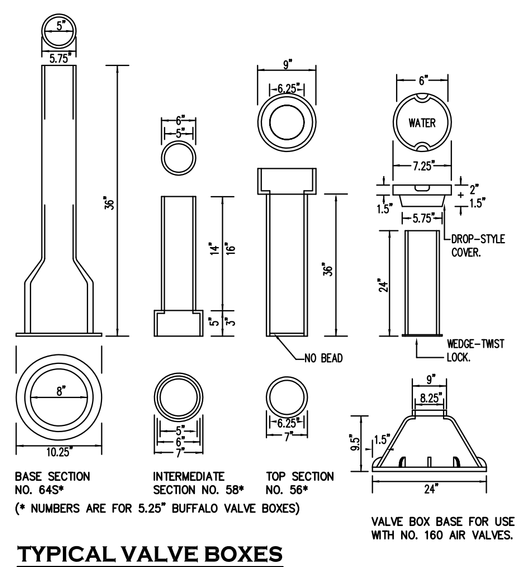


## TYPICAL VALVE BOXES

NOT TO SCALE

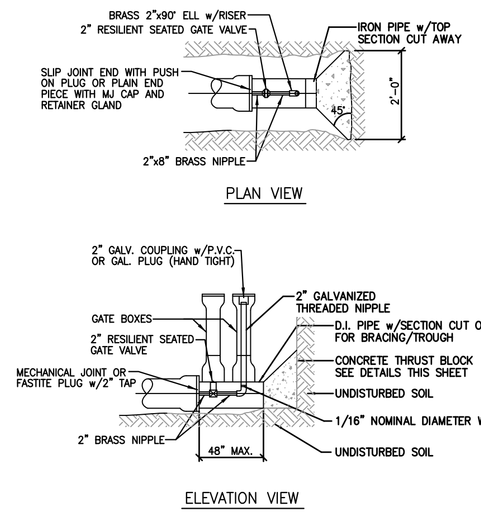


## STANDARD 2" BLOW OFF DETAIL

N.T.S.

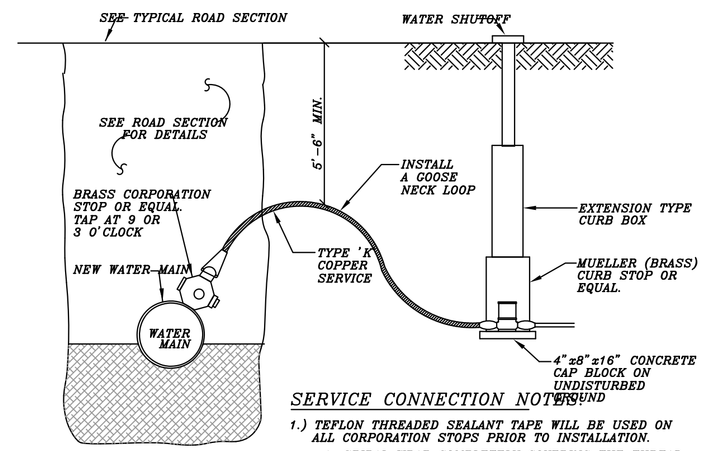


### SERVICE CONNECTION NOTES

1.) TEFLON THREADED SEALANT TAPE WILL BE USED ON ALL CORPORATION STOPS PRIOR TO INSTALLATION.
   A. SPIRAL WRAP COMPLETELY COVERING THE THREAD AREA WITH TWO WRAPS.
   B. PIPE DOPE OR OTHER LIQUID THREAD SEALANTS ARE NOT ACCEPTABLE.
2.) LEAVE UP TO THREE THREADS SHOWING OUTSIDE OF PIPE. A TORQUE OF 35 POUNDS IS RECOMMENDED.

## TYPICAL SERVICE CONNECTION

## GENERAL NOTES SERVICE CONNECTION

1. CONTRACTOR SHALL CONFIRM ALL PIPE SIZES WITH BARTLETT WATER DISTRICT.
2. WORK AND MATERIALS TO BE IN ACCORDANCE WITH BARTLETT WATER DISTRICT STANDARDS.
3. CONTRACTOR SHALL STUB NEW SERVICES AT THE EDGE OF THE R.O.W. IN THE MIDDLE OF EACH LOT, UNLESS OTHERWISE NOTED ON THE PLAN/PROFILES.
4. FINAL LOCATION OF ALL BLOW OFF VALVES, SHUT OFF VALVES, STREET BOXES AND HYDRANT VALVES SHALL BE IN ACCORDANCE WITH THE BARTLETT WATER DISTRICT.

## POTABLE WATER LINE DETAILS

NOTES
1. UNDERDRAIN PIPE INVERT ELEVATIONS SHALL BE AT LEAST 42 INCHES BELOW GUTTER GRADES.
2. PERFORATIONS IN UNDERDRAIN PIPE SHALL BE ORIENTED DOWN. THE PIPE SHALL BE FURNISHED WITH A HEAVY DUTY FABRIC WRAP, SUCH AS "FILTER SOCK" BY ADS.

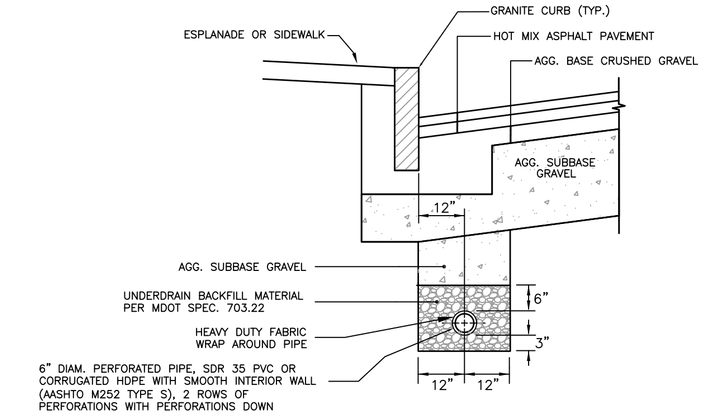


UNDERDRAIN INSTALLATIONL – ALTERNATIVE "B"

NOT TO SCALE

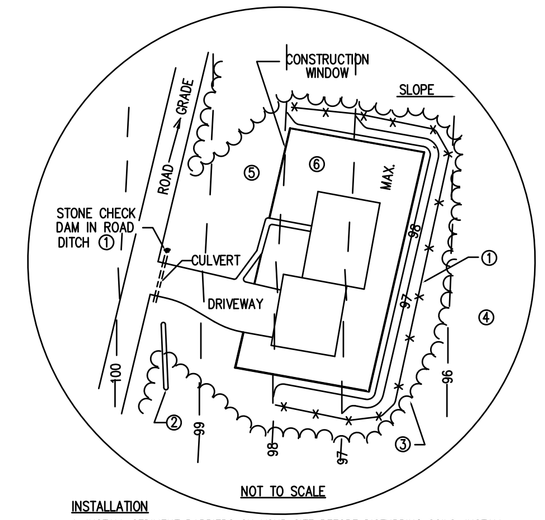


NOT TO SCALE

INSTALLATION
1. INSTALL SEDIMENT BARRIERS ON YOUR SITE BEFORE DISTURBING SOILS. INSTALL EROSION CONTROL MIXTURE MAY BE USED IN LIEU OFF SILT FENCE.
2. CONSTRUCT A DIVERSION DITCH TO KEEP UPSLOPE RUNOFF OUT OF WORK AREA.
3. MARK CONSTRUCTION BOUNDARIES ON SITE
4. MARK & PROTECT VEGETATION TO REMAIN.
5. USE TEMPORARY MULCH AND RYE-SEED TO PROTECT DISTURBED SOILS OUTSIDE
6. PERMANENTLY SEED AREAS NOT TO BE PAVED WITHIN SEVEN DAYS OF COMPLETING
7. CONTRCATOR RESPONSIBLE FOR MAINTENANCE AND REPAIR OF BMPs

## INDIVIDUAL UNIT EROSION CONTROL

N.T.S.

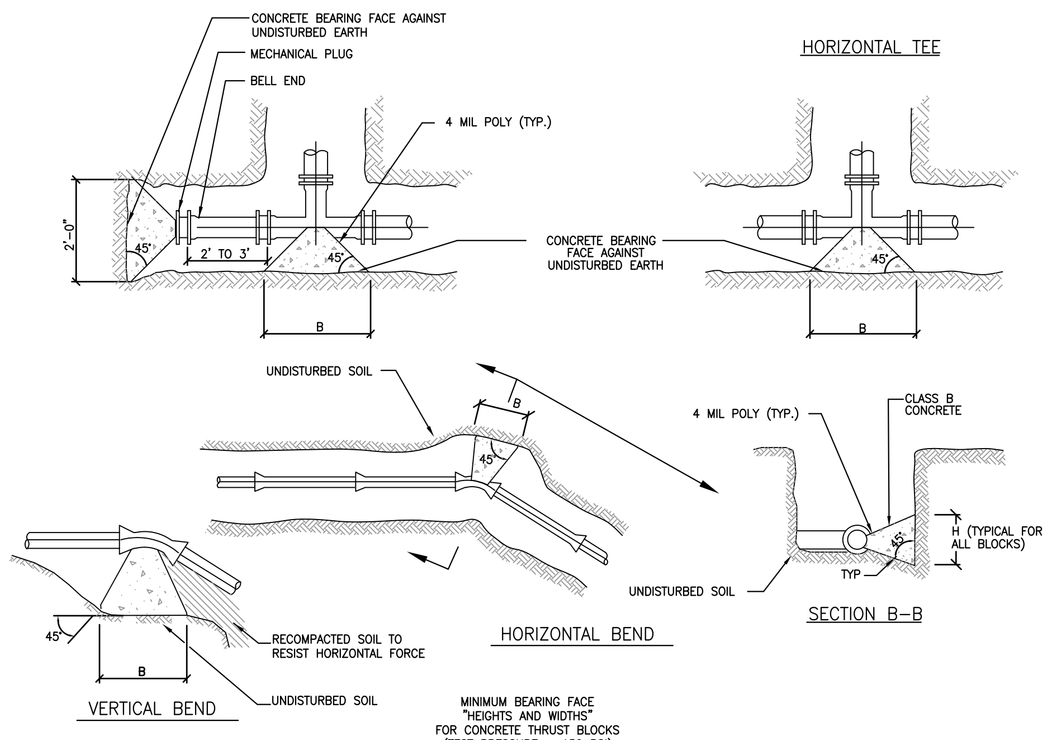


MINIMUM BEARING FACE "HEIGHTS AND WIDTHS" FOR CONCRETE THRUST BLOCKS (TEST PRESSURE = 150 PSI)

| HEIGHT (H) AND WIDTH (B) OF BEARING FACE FOR FITTING TO BE RESTRAINED | | | | | | | | | | | | |
|---|---|---|---|---|---|---|---|---|---|---|---|---|
| PIPELINE SIZE (diameter) | 11\' BEND | | 22\' BEND | | 45' BEND | | 90' BEND | | TEES & PLUGS | | WYES | |
| | H | B | H | B | H | B | H | B | H | B | H | B |
| 6" | 1.0 | 1.0 | 1.0 | 1.0 | 1.0 | 2.0 | 1.75 | 2.0 | 1.25 | 2.0 | 1.0 | 2.0 |
| 8" | 1.0 | 1.0 | 1.0 | 1.75 | 1.5 | 2.25 | 1.75 | 3.5 | 1.5 | 3.0 | 1.5 | 2.25 |
| 12" | 1.0 | 1.5 | 1.25 | 2.25 | 1.75 | 3.0 | 2.25 | 4.25 | 2.25 | 3.0 | 1.75 | 3.0 |

1. HYDROSTATIC AND LEAKAGE TEST PRESSURE PER SPECIFICATIONS.
2. UNDISTURBED EARTH. SIDE OF TRENCH OR OTHER EXCAVATION.
3. SEE DIAGRAM FOR H AND B LOCATION REFERENCE. H AND B IN FEET.
4. PLACE 4 MIL POLYETHYLENE BETWEEN FITTINGS AND THRUST BLOCKS.
5. SOIL BEARING CAPACITY TO BE A MINIMUM OF 2000 PSF.

## TYPICAL BEARING THRUST BLOCK SECTION & DETAILS

N.T.S.

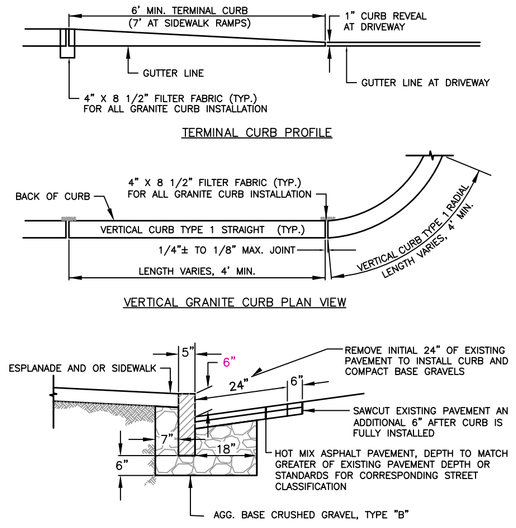


VERTICAL GRANITE CURB EX. STREETS

NOT TO SCALE

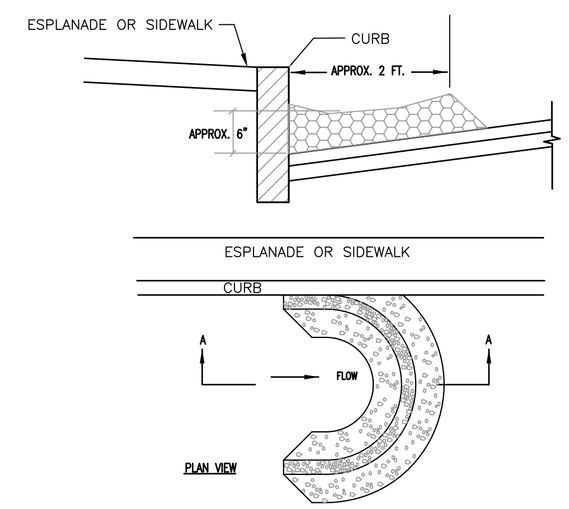


NOTES:
1. USE 1" TO 2" CLEAN STONE.
2. PLACE STONE OVER GEOTEXTILE.
3. THE CHECK DAMS SHALL BE FLATTENED AND GRADED IN A MANNER WHICH PROTECTS THE AREA FROM EROSION AND CHANNEL BLOCKAGE. (GEOTEXTILE MUST BE REMOVED).
4. THE GEOTEXTILE SHALL BE DISPOSED OF OFFSITE.

## TEMP. GUTTER PROTECTION DETAIL

N.T.S.

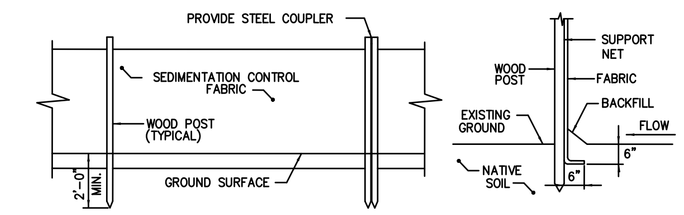


NOTE: BOTTOM OF SILT MUST BE KEYED INTO GROUND

## SILTATION FENCE DETAIL

N.T.S.

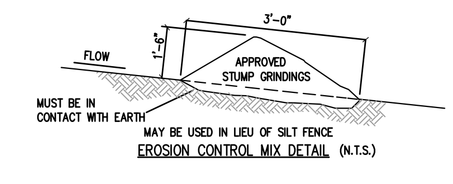


EROSION CONTROL MIX DETAIL (N.T.S.)

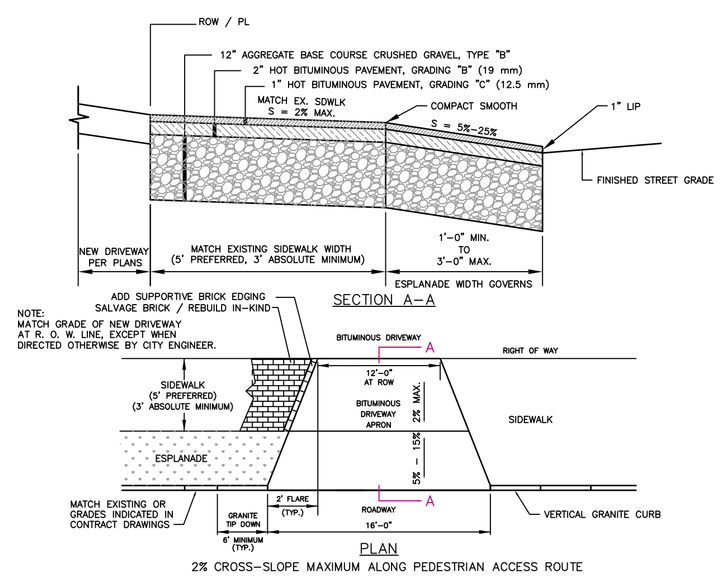


PLAN

2% CROSS-SLOPE MAXIMUM ALONG PEDESTRIAN ACCESS ROUTE

SEE SITE PLAN FOR APRON SHAPE

BITUMINOUS CONCRETE DRIVEWAY APRON

NOT TO SCALE

## GENERAL EROSION CONTROL NOTES

- EROSION CONTROL MEASURES (BMPs) SHALL BE INSTALLED BELOW ALL SOIL DISTURBANCE PER SITE PLAN
- SEED AND MULCH SHALL BE APPLIED W/IN 5 DAYS OF FINAL GRADING, OR BEFORE A RAIN EVENT
- PERMANENT SEEDING SHALL BE COMPLETE BY 9/15 OF ANY YEAR
- AFTER 10/15 BROADCAST WINTER RYE AND MULCH FOR SOIL PROTECTION OUTSIDE OF GROWING SEASON
- WHEN MULCH IS APPLIED, SOIL MUST NOT BE VISIBLE
- ALL FINISHED SLOPES EXCEEDING 8% SHALL BE COVERED WITH EROSION CONTROL BLANKET (CURLEX II)
- SILT FENCE AND EROSION CONTROL MIX (ECM) ARE INTERCHANGEABLE
- MULCH SHALL BE APPLIED TO EXPOSED AREAS WITHIN 7 DAYS OF DISTURBANCE, OR PRIOR TO A PREDICTED RAIN EVENT OR SNOW COVER
- SILT FENCE AND/OR ECM SHALL REMAIN IN PLACE UNTIL 85% VEGETATIVE CATCH
- ALL EXCAVATED SPOILS TO BE REMOVED FROM SITE (NO STOCK PILES)
- STONE CHECK DAMS ARE REQUIRED IN STREET GUTTERS PER SITE PLAN
- NO STUMPAGE OR ORGANICS ARE TO BE BURRIED IN TRENCH BACKFILL OR SLOPES
- PUBLIC ROADS MUST BE KEPT FREE OF LOODSE DIRT AND MUD DAILY

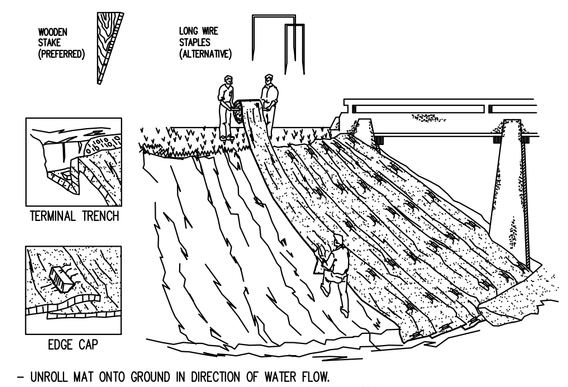


- UNROLL MAT ONTO GROUND IN DIRECTION OF WATER FLOW.
- MAT SHOULD LIE FLAT. DO NOT STRETCH MAT OVER GROUND. STRETCHING MAY CAUSE MAT TO BRIDGE DEPRESSIONS IN THE SURFACE AND ALLOW EROSION UNDERNEATH.
- BURY TRANSVERSE TERMINAL ENDS OF MAT TO SECURE AND PREVENT EROSIVE FLOW UNDERNEATH.
- SECURE MAT SNUGLY INTO ALL TRANSVERSE CHECK SLOTS.
- BACKFILL AND COMPACT TRENCHES AND CHECK SLOTS AFTER STAKING THE MAT IN BOTTOM OF TRENCH.
- OVERLAP ROLL ENDS BY THREE (3) FEET (MIN.) WITH UPSLOPE MAT ON TOP TO PREVENT
- OVERLAP ADJACENT EDGES OF MAT BY THREE (3) INCHES (MIN.) AND STAKE.
- WOOD STAKES ARE RECOMMENDED FOR PINNING MAT TO THE GROUND SURFACE.
- STAKE OVERLAPS LONGITUDINALLY AT THREE (3) TO FIVE (5) FOOT INTERVALS.
- FOLOW COLORED DOT PATTERNS BY MANUFACTURER
- REQUIRED ON ALL SLOPES > 8% WINTER; 15% SUMMER

## GENERAL INSTALLATION GUIDELINES ON SLOPES EROSION CONTROL BLANKET

N.T.S.

NOTE:
LOCATIONS AND ELEVATIONS OF STUBS SHOWN ON THE PLANS ARE TO BE CONSIDERED AS APPROXIMATE AND MAY BE ADJUSTED AS DIRECTED TO SUIT FIELD CONDITIONS.

HOUSE CONNECTIONS AND CATCH BASINS CONNECTIONS TO THE MAIN LINE OF THE SEWER, SHALL CONSIST OF AN APPROPRIATE "Y" BRANCH CONNECTION AS SHOWN ON THE PLANS, OR AS DIRECTED. ACTUAL "Y" LOCATIONS FOR HOUSE CONNECTIONS AND CATCH BASIN CONNECTIONS SHALL BE DETERMINED DURING CONSTRUCTION. THE CONTRACTOR SHALL KEEP A COMPLETE RECORD OF "Y" LOCATIONS WHICH SHALL BE GIVEN TO THE CITY OF PORTLAND UPON COMPLETION OF THE CONTRACT.
ALL PVC TO PVC COUPLING SHALL BE "SOLID PVC COUPLINGS".

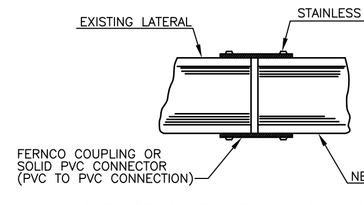


FERNCO COUPLING FOR REPAIR OR REPLACEMENT

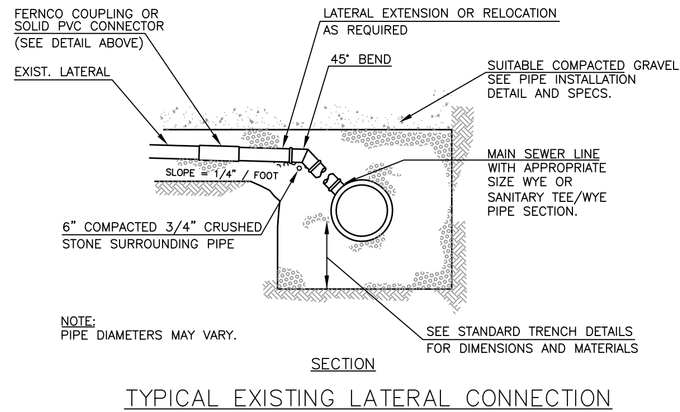


SECTION

TYPICAL EXISTING LATERAL CONNECTION

NOT TO SCALE

NOTES:
DEPTH OF BITUMINOUS PAVEMENT AND AGGREGATE COURSES SHALL BE DETERMINED BY STREET CLASSIFICATION.

ANY ALTERNATE TRENCHING OR PAYMENT METHODS SHALL BE APPROVED IN ADVANCE BY THE CITY OF PORTLAND, DEPARTMENT OF PUBLIC SERVICES..

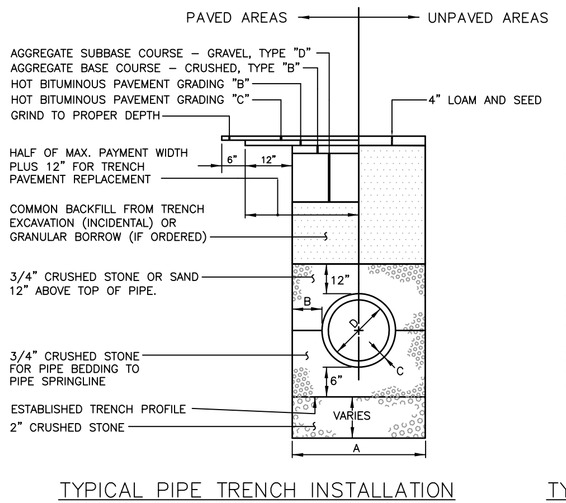


TYPICAL PIPE TRENCH INSTALLATION

NOT TO SCALE

NOTES

1. ALTERNATIVE CONSTRUCTION METHODS OR PAYMENT METHODS SHALL BE APPROVED IN ADVANCE BY THE CITY.
2. IN PAVED AREAS, DEPTHS OF GRAVEL AND HOT MIX ASPHALT PAVEMENT SHALL MATCH THE GREATER OF EXISTING CONDITIONS OR THE REQUIREMENTS FOR THE CORRESPONDING STREET CLASSIFICATION.
3. DIMENSION B SHALL BE SUFFICIENT TO ALLOW CRUSHED STONE BEDDING TO BE PLACED AND COMPACTED UNDER THE HAUNCHES OF THE PIPE; BUT IN ALL CASES DIMENSION B SHALL BE AT LEAST 9".
4. DIMENSION A IS THE MAXIMUM WIDTH ALLOWED FOR CALCULATING PAY QUANTITIES UNDER GRANULAR BORROW, CRUSHED STONE, STRUCTURAL EARTH EXCAVATION, AND STRUCTURAL ROCK EXCAVATION. DIMENSION A SHALL BE BASED ON PIPE DIAMETER D, AS SET FORTH IN THE FOLLOWING TABLE.

| PIPE DIAMETER, D (INCHES) | MAX. TRENCH WIDTH, A (FEET) |
|---|---|
| 4 | 4.0 |
| 6 | 4.0 |
| 8 | 4.0 |
| 10 | 4.0 |
| 12 | 5.0 |
| 15 | 5.0 |
| 18 | 5.0 |
| 21 | 5.0 |
| 24 | 6.0 |
| 27 | 6.0 |
| 30 | 6.0 |
| 36 | 6.0 |
| 42 | 7.0 |
| 48 | 7.0 |

TYPICAL PIPE INSTALLATION – NOTES

NOT TO SCALE

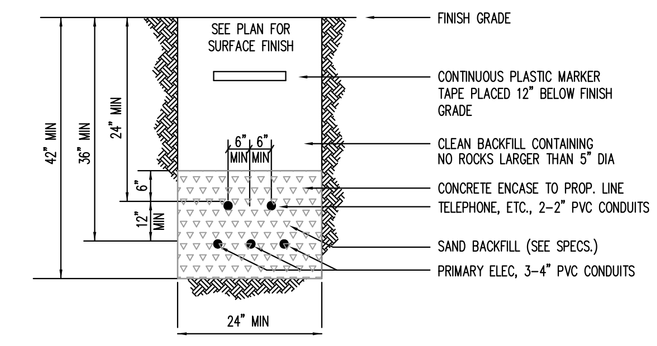


NOTES:
1. INSTALLATION SHOULD NOT ALLOW THE INTER-TWINING OF CABLES.
2. BEDDING AND BACKFILL SHALL BE FREE OF ROOTS, STUMPS AND OTHER DEBRIS.
3. INSTALL SCHEDULE 40 CONDUIT UNDER ALL PAVED AREAS PER APPROPRIATE UTILITY COMPANY SPECIFICATIONS.
4. CONCRETE ENCASE CONDUIT FROM UTILITY POLE TO PROPERTY LINE PER SITE PLAN.

## TYPICAL UNDERGROUND CABLE TRENCH

N.T.S.

STATE OF MAINE
ROSS A. CUDLITZ
LIC. # 1965 P.E.
FOR THE PROFESSIONAL ENGINEER
Ross A. Cudlitz, P.E.

WITH MY PERMISSION AND KNOWLEDGE, I AFFIX THIS ELECTRONIC SEAL & SIGNATURE
MAY 18, 2016

# 37 DEANE STREET

NEW CONSTRUCTION | SINGLE–FAMILY HOUSE


OWNER
Julian Gazdik
Passive Works, LLC.
89 Willow Street
South Portland, ME 04106
E–MAIL:
juliangazdik@gmail.com
PHONE: 917.816.6003

DEXTROUS CREATIVE
PORTLAND, ME 04102
TRACIE REED, ARCHITECT
NCARB, AIA, LEED AP BD+C
tracierees@dextroucscreative.com
207.409.0459 (cell)

PROJECT TEAM

CIVIL ENGINEERING
Ross A. Cudlitz, PE ME, NH, VT
CPESC, CPSWQ, CESSWI
Engineering Assistance & Design, Inc. (EA&D)
10 North Road
Yarmouth, Maine 04096
Ph/Fx: 207–846–0839
Mobile: 207–838–7663
ztlduc@maine.rr.com

STRUCTURAL ENGINEER
Larry Wichroski P. E
Engineering Design Professionals
P.O. Box 575
Freeport, Me 04032
T: 207–865–9505
EDPLarry@yahoo.com

GEOTECHCNIAL ENGINEER
Steve Marcotte, CG, PG, LSE
Sevee & Maher Engineers, Inc.
4 Blanchard Rd
Cumberland Center, ME 04021
T: 207–829–5016
C: 207–939–2600
sbm@smemaine.com

LANDSCAPE ARCHITECT
Tony Cowles
Maine Licensed Landscape Architect
Cowles studio | landscape architecture
T: (207) 415–4332
tony@cowles–studio.com

GENERAL CONTRACTOR
Josh Wojcik
Upwright Frameworks
School St, Wilton, ME 04294
T: (207) 749–9656
jwojcik@uprightframeworks.com


| No. | Description | Date |
|---|---|---|
| 0 | DETAILS | 05–18–16 |
| | | |
| | | |
| | | |
| | | |

MISC. DETAILS PLAN

05.16.16

RAC

Checker

D–1.0

AS–NOTED