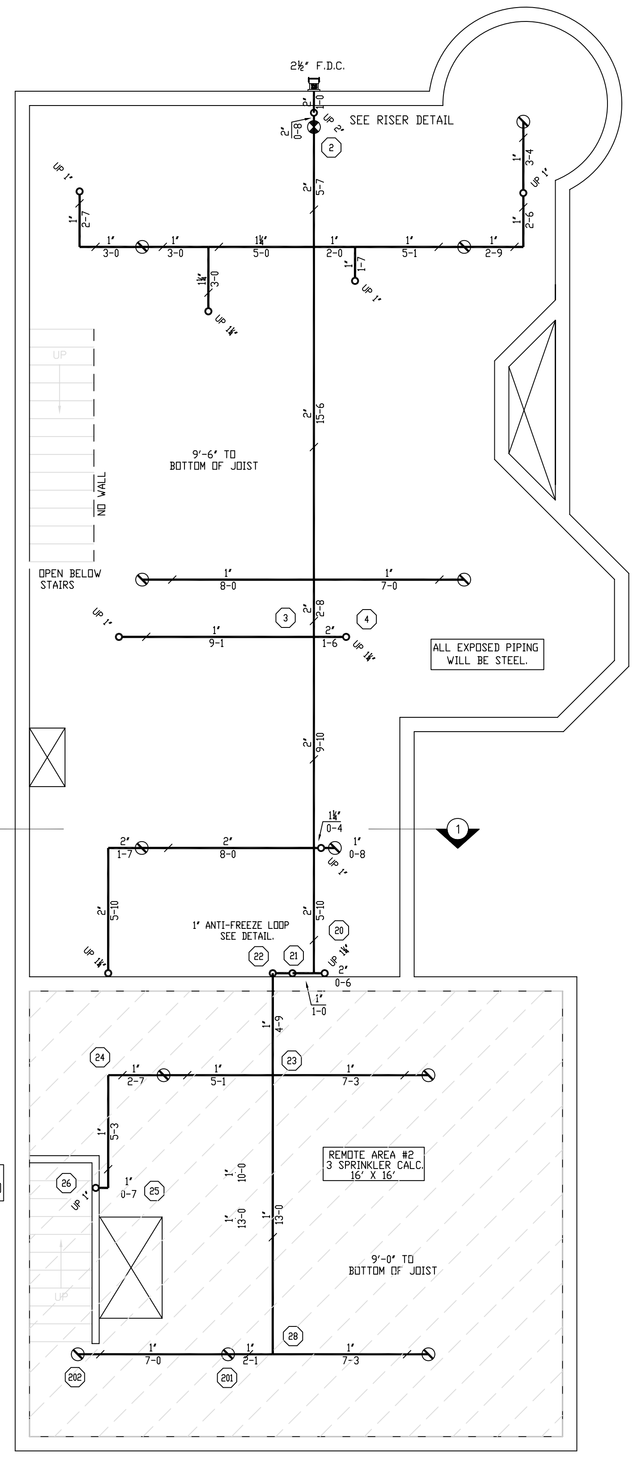

BASEMENT FIRE PROTECTION

SCALE 1/4"=1'-0" QUANTITY = 12

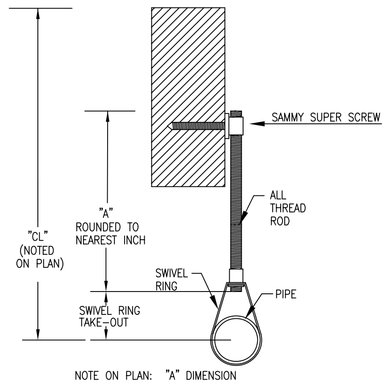

TYPE #10 HANGER

HYDRAULIC DESIGN DATA	
System # & Area	#1 – #1 BASEMENT
No. of Sprinklers	3
Density	0.05 GPM
Designed Area	ROOM
Domestic Allowance	50 GPM
Water Flow Rate	94 GPM
Residual Pressure at Base of Riser	64 PSI
Safety Factor at Base of Riser	6.52 PSI

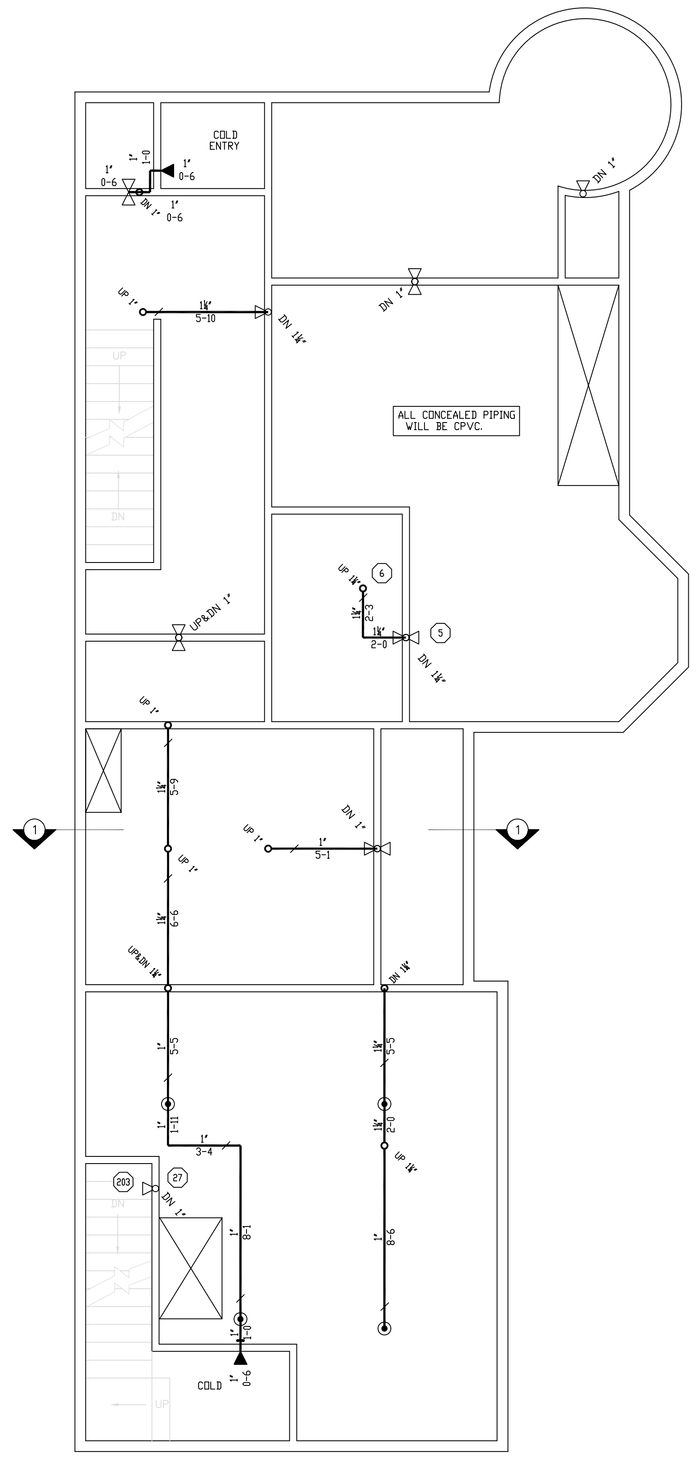

GROUND FLOOR FIRE PROTECTION

SCALE 1/4"=1'-0" QUANTITY = 4 QUANTITY = 13 QUANTITY = 2

REVISIONS	NOTES
	K=4.9 PENDANT SPRINKLER COVERAGE: 16'X16'
	K=4.4 SIDEWALL SPRINKLER COVERAGE: 14'X14'

HEAD COUNT									
SPRINKLER TYPE	IDENTIFICATION NO.	MFG.	ESC.	MODEL	FINISH	ORIFICE	TEMP.	SYMBOL	QUANT.
QUICK RESP. PENDANT K= 4.9	TY2234	TYCO	N/A	LFII	BRASS	1/2"	155°		12
QUICK RESP. PENDANT K= 4.9	TY2234	TYCO	SEMI-RECS	LFII	WHITE	1/2"	155°		4
QUICK RESP. SIDEWALL K= 4.4	TY2334	TYCO	2 PIECE	LFII	WHITE	1/2"	155°		13
QR.DRY SIDEWALL K= 4.4	TY2335	TYCO	N/A	LFII	BRASS	1/2"	155°		2
TOTAL SPRINKLERS THIS DRAWING									31

STANDARD SYMBOLS
– POST INDICATOR VALVE
– KEY VALVE
– FIRE HYDRANT
– FIRE DEPT. CONNECTION
– O.S. & Y GATE VALVE
– SWING CHECK VALVE
– NEW UNDERGROUND
– EXIST UNDERGROUND

STANDARD SYMBOLS
– ALARM CHECK VALVE
– RISER W/ALARM VALVE
– RISER W/DRY VALVE
– RISER W/ELEC. FLOW SWITCH
– RISER W/DELUGE VALVE
– WATER MOTOR BELL
– ELECTRIC BELL
– FLUSH FIRE DEPT. CONNECTION

INSPECTIONS	
1.	
2.	
3.	
4.	
5.	
RESPONSIBLE MANAGING SUPERVISOR #348	
CONTRACTOR LICENSE #295	

519 CUMBERLAND AVENUE
PORTLAND, MAINE 04101

FIRE PROTECTION PLAN

FREEDOM FIRE PROTECTION, INC.
209 QUAKER RIDGE ROAD
CASCO, MAINE 04015

JOB No.	M0146
DATE	11/5/13
DRAWN BY	MJN
SCALE	AS NOTED
SHEET No.	FP–2of3