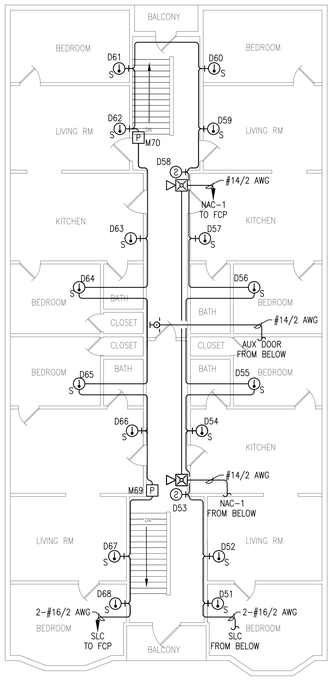

3RD FLR FIRE ALARM PLAN
SCALE: 1/8"=1'-0"

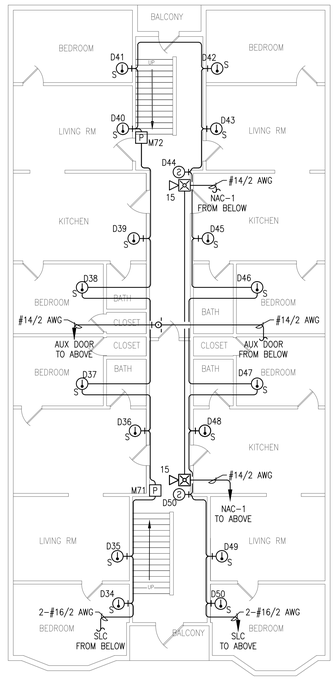

2ND FLR FIRE ALARM PLAN
SCALE: 1/8"=1'-0"

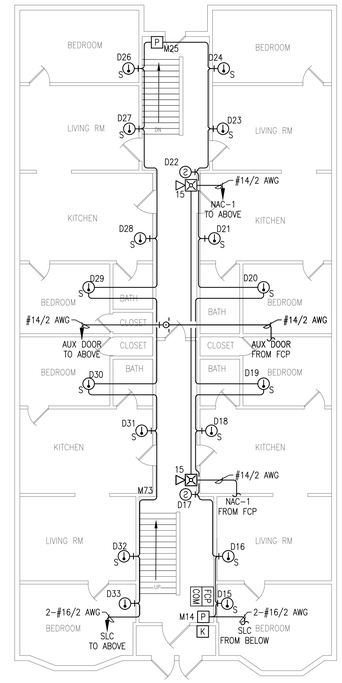

1ST FLR FIRE ALARM PLAN
SCALE: 1/8"=1'-0"

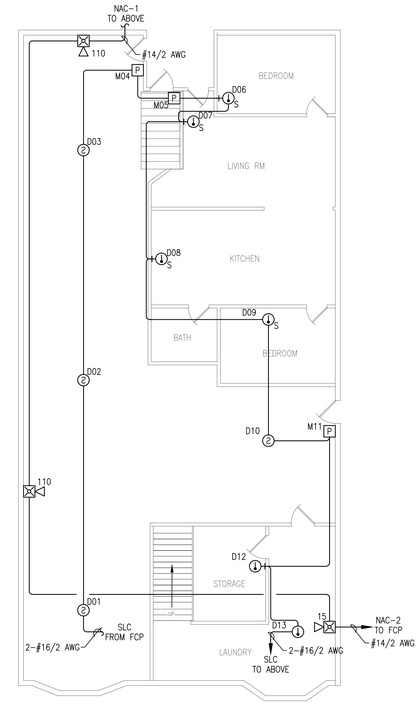

BASEMENT FIRE ALARM PLAN
SCALE: 1/8"=1'-0"

SILENT KNIGHT
5808 Calculations

Global Project Values:

Project Name:	119 Sherman Street	Standby Hours:	24
Project ID:	12056	Alarm Mins:	5
Prepared By:	C Haws	Derating Factor:	1.2
Date:	2/21/2012	Voltage Drop Warning Threshold %:	20

Panel ID: 5808 — Model: 5808 Add. Fire Alarm Control Panel — Max NAC Current: 3.0 Amps
Location: MAIN FLOOR ENTRY — Volts: 24 VDC — Max Panel Current: 5.0 Amps

Ckt.#	Circuit Name	Qty	Current Draw Standby	Current Draw Alarm	Wire AWG & Type	Ohms Per 1000 Ft.	Length(ft) One-Way	Actual Ohms	Volts @ EOL	%Drop
5808	5808 CTRL Panel	1	0.170	0.325	N/A					
SLC-DEV	Addrsbl SLC Devices	72	0.040	0.040	N/A					
PGM-I/O #1	Sounder Base Power	cfg	0.002	1.820	#14 Solid	2.52	410	2.07	16.64	18.44%
PGM-I/O #2	NAC-1	cfg	0.000	0.474	#14 Solid	2.52	284	1.43	19.72	3.33%
PGM-I/O #3	NAC-2	cfg	0.000	0.503	#14 Solid	2.52	212	1.07	19.86	2.63%
PGM-I/O #4	Aux Door	cfg	0.000	0.000	#14 Solid	2.52		0.00	20.40	0.00%
Total Standby Current (Amps)			0.211	3.162	Total Alarm Current (Amps)					
Standby Time In Hours			24	0.083	Alarm Time In Minutes / 60		(5 Mins)			
Total Standby AH Required			5.068	0.263	Total Alarm AH Required					
Total Combined AH Required			5.33							
Multiply By The Derating Factor			1.20							
Minimum Battery AmpHours Required			6.40							

Command Shortcuts: Configure Circuits — Print Page

#1. Note: A value must be entered if you have selected any NAC circuits as AUX Power.

SILENT KNIGHT — Circuit Configuration — Print Circuits Detail

Project Information
Project Name: 119 Sherman Street — **Project ID:** 12056
Prepared By: C Haws — **Date:** 2/21/2012

Ckt. Number: PGM-I/O #1 — Panel ID: 5808
Ckt. Name: Sounder Base Power — I/O Use: Notification Appl Circuit

Qty	Device	Current Draw Each Standby	Current Draw Each Alarm	Current Draw Total Standby	Current Draw Total Alarm
52	SK Sounder Base	0.000	0.035	0.002	1.820
	Unused			0.000	0.000
			Totals	0.002	1.820

< Return To Main — Edit Device Database

Ckt. Number: PGM-I/O #2 — Panel ID: 5808
Ckt. Name: NAC-1 — I/O Use: Notification Appl Circuit

Qty	Device	Current Draw Each Standby	Current Draw Each Alarm	Current Draw Total Standby	Current Draw Total Alarm
6	System Sensor P2R 15cd	0.000	0.079	0.000	0.474
	Unused			0.000	0.000
			Totals	0.000	0.474

< Return To Main — Edit Device Database

Ckt. Number: PGM-I/O #3 — Panel ID: 5808
Ckt. Name: NAC-2 — I/O Use: Notification Appl Circuit

Qty	Device	Current Draw Each Standby	Current Draw Each Alarm	Current Draw Total Standby	Current Draw Total Alarm
2	System Sensor P2R 110cd	0.000	0.212	0.000	0.424
1	System Sensor P2R 15cd	0.000	0.079	0.000	0.079
	Unused			0.000	0.000
			Totals	0.000	0.503

< Return To Main — Edit Device Database

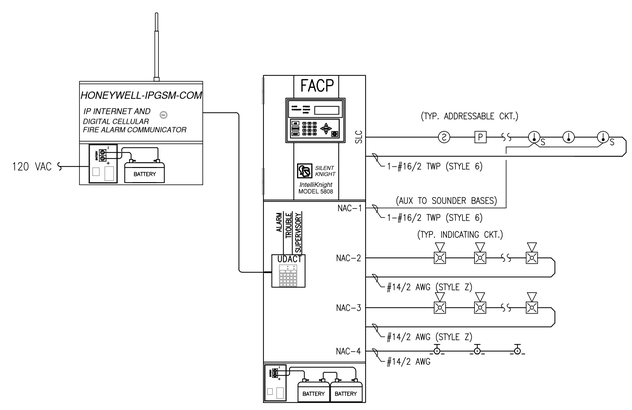

FIRE ALARM RISER DIAGRAM
SCHEMATIC: NO SCALE

IPGSM-COM Battery Calculation

2/22/2012

PROJECT NAME: 119 SHERMAN
Required Standby Time: 24 Hours
Required Alarm Time: 5 Minutes

Regulated Load in Standby

Device Type	Number of Devices		Current (Amps)		Total Current (Amps)
IPGSM-COM Cellular Communicator	1	X	0.0600	=	0.0600
TOTAL STANDBY LOAD					0.0600

Regulated Load in ALARM

Device Type	Number of Devices		Current (Amps)		Total Current (Amps)
IPGSM-COM Cellular Communicator	1	X	0.2500	=	0.2500
TOTAL ALARM LOAD					0.2500

Battery Requirements

Standby Load			Required Standby Time in Hours		
Current (Amps)	0.0600	X	24.0000	=	1.4400
Alarm Load			Required Alarm Time in Hours		
Current (Amps)	0.2500	X	0.0833	=	0.0208
Total Ampere Hours (before derating factor)					1.4608
Derating Factor				X	1.2
TOTAL AMPERE HOURS REQUIRED				=	1.7530
BATTERY TO BE PROVIDED (12v)					**7 AH**

OPERATIONS MATRIX

FIRE ALARM INPUT	FIRE ALARM OUTPUT	ACTIVATE ALARM INDICATOR	ACTIVATE AUDIBLE ALARM	ACTIVATE SUPERVISORY INDICATOR	ACTIVATE AUDIBLE SUPERVISORY SIGNAL	ACTIVATE TROUBLE INDICATOR	ACTIVATE AUDIBLE TROUBLE INDICATOR	TRANSMIT ALARM SIGNAL	TRANSMIT SUPERVISORY SIGNAL	TRANSMIT TROUBLE SIGNAL
SMOKE DETECTORS	●	●						●		
HEAT DETECTORS	●	●						●		
PULL STATIONS	●	●						●		
FIRE ALARM AC POWER FAIL						●	●			●
FIRE ALARM LOW BATTERY						●	●			●
OPEN CIRCUIT						●	●			●
GROUND FAULT						●	●			●
NAC SHORT CIRCUIT						●	●			●
LOSS OF AC TO BUILDING						●	●			●

GENERAL NOTES:

1. THESE DRAWINGS ARE DIAGRAMMATIC. REFER TO THE ARCHITECTURAL DRAWINGS FOR EXACT DIMENSIONS.
2. INSTALLATION SHALL COMPLY WITH NEC, NFPA 72 AND NFPA 101 ALL OTHER APPLICABLE CODES AS REQUIRED BY THE LOCAL AUTHORITY HAVING JURISDICTION.
3. WIRING DEPICTED ON THESE PLANS IS SCHEMATIC – ACTUAL WIRE LOCATIONS MAY DIFFER FROM THESE PLANS. WIRING SHALL BE PERFORMED AS ACTUAL BUILDING CONSTRUCTION CONDITIONS ALLOW AND TO MINIMIZE PENETRATIONS THROUGH AREA SEPARATION WALLS AND FIRE WALLS. THE USE OF A RACEWAY IS PERMITTED AS LONG AS NO 110V OR HIGHER VOLTAGE CABLES ARE IN THE SAME RACEWAY.
4. FIRE RATINGS SHALL BE MAINTAINED FOR ALL PENETRATIONS THROUGH FIRE–RATED CONSTRUCTION.
5. POWER FOR ALL FIRE ALARM PANELS AND FIRE ALARM POWER SUPPLIES MUST BE PROVIDED BY A DEDICATED AC BRANCH CIRCUIT.
6. POWER–LIMITED AND NONPOWER–LIMITED CIRCUIT WIRING MUST REMAIN SEPARATED IN CABINET. ALL POWER–LIMITED CIRCUIT WIRING MUST REMAIN AT LEAST 0.25" AWAY FROM ANY NONPOWER–LIMITED CIRCUIT WIRING. FURTHERMORE, ALL POWER–LIMITED AND NONPOWER–LIMITED CIRCUIT WIRING MUST ENTER AND EXIT THE CABINET THROUGH DIFFERENT KNOCK OUTS AND/OR SEPARATE CONDUITS.
7. WHEN UTILIZING CLASS "A" CIRCUITS, SEPARATE OUTGOING AND RETURN CONDUCTORS OF CLASS "A" CIRCUITS BY A MINIMUM OF 12" WHERE RUN VERTICALLY AND 48" WHERE RUN HORIZONTALLY.
8. WHEN UTILIZING SHIELDED CABLE TIE SHIELDS THROUGH AND INSULATE AT EACH JUNCTION BOX. INSULATE AND TAPE BACK AT END.
9. ALL FIRE ALARM CABLING SHALL BE ACCEPTABLE TO THE FIRE ALARM EQUIPMENT MANUFACTURER FOR THE INTENDED PURPOSE.
10. SMOKE DETECTORS SHALL NOT BE INSTALLED UNTIL AFTER CONSTRUCTION CLEAN–UP IS COMPLETED AND FINAL.
11. LOCATE SMOKE DETECTORS A MINIMUM OF THREE (3) FEET FROM MECHANICAL DIFFUSERS. WALL–MOUNTED SMOKE DETECTORS SHALL BE LOCATED A MINIMUM OF 4" AND A MAXIMUM OF 12" FROM CEILING. CEILING–MOUNTED SMOKE DETECTORS SHALL BE MOUNTED ON CEILINGS AND NOT ON THE BOTTOMS OF BEAMS OR JOISTS.
12. PROVIDE SYNCHRONIZATION OF ALL VISUAL NOTIFICATION APPLIANCE CIRCUITS. PROVIDE ALL REQUIRED SYNC MODULES. PROVIDE A MULTI–SYNC MODE SLAVE CONNECTION BETWEEN ALL SYNC MODULES.
13. VERIFY ALL FIELD SELECTABLE AUDIBILITY SETTINGS OF NOTIFICATION APPLIANCES WITH FIRE ALARM CONTRACTOR.
14. UPON COMPLETION OF THE FIRE ALARM SYSTEM INSTALLATION AND PROGRAMMING, THE INSTALLING CONTRACTOR SHALL PERFORM FINAL TESTING OF THE ENTIRE SYSTEM, PER ALL APPLICABLE CODES, AND SHALL COORDINATE AND PERFORM A FINAL FIRE ALARM SYSTEM INSPECTION.
15. PROVIDE OFF–SITE MONITORING AS REQUIRED BY THE INTERNATIONAL FIRE CODE, SECTION 907.15 AND THE LOCAL AUTHORITY HAVING JURISDICTION.
16. INSTALLING CONTRACTOR SHALL, PHYSICALLY, LABEL ALL INITIATING DEVICES AND NOTIFICATION APPLIANCE CIRCUIT END OF LINE (WHEN WIRING CLASS "B"). THESE LABELS SHALL BE IN PLACE PRIOR TO START–UP AND TESTING.

FIRE ALARM SYMBOL LEGEND

NOTE: ALL SYMBOLS MAY NOT BE USED ON THIS PROJECT

SYMBOL	DESCRIPTION	MOUNTING
FCP	FIRE ALARM CONTROL PANEL	WALL–TOP @ 66"
FPS	FIRE ALARM POWER SUPPLY	FIELD VERIFY
FSA	FIRE SYSTEM ANNUNCIATOR	WALL–TOP @ 66"
FSD	FIRE/SMOKE DAMPER	BY OTHERS
	SMOKE DETECTOR	CEILING
	DUCT SMOKE DETECTOR	BY OTHERS
	HEAT DETECTOR	CEILING
K	KEY BOX/KNOX BOX	FIELD VERIFY
MM	ADDRESSABLE MONITOR MODULE	FIELD VERIFY
P	MANUAL PULL STATION	WALL @ 48"
R	CONTROL RELAY (MULTI–VOLTAGE)	FIELD VERIFY
RM	ADDRESSABLE RELAY MODULE	FIELD VERIFY
	MAGNETIC DOOR HOLDER	FIELD VERIFY
	WATER FLOW SWITCH	BY OTHERS
	VALVE TAMPER SWITCH	BY OTHERS
	BELL	BY OTHERS
	CEILING MOUNT STROBE	FIELD VERIFY
	CEILING MOUNT HORN / STROBE	FIELD VERIFY
	CEILING MOUNT SPEAKER / STROBE	FIELD VERIFY
	HORN	WALL @ 10'–0
	HORN / STROBE	WALL 80"–96"
	SPEAKER / STROBE	WALL 80"–96"
	SPEAKER	WALL @ 90"
	STROBE	WALL 80"–96"

ABBREVIATION	DESCRIPTION
E	EXISTING
G	WITH GUARD
P	PENDENT MOUNT
R	RESIDENTIAL (110V)
S	SOUNDER BASE
WP	WEATHER PROOF
EOL	END OF LINE RESISTOR
EOLR	END OF LINE RELAY
AWG	AMERICAN WIRE GAUGE
TWP	TWISTED PAIR
TWSP	TWISTED SHIELDED PAIR
FPLP	FIRE POWER LIMITED PLENUM
FPLR	FIRE POWER LIMITED RISER

SPEAKER WATTAGE (2W) 75 — SS — STROBE CANDELA 30 — HS

S — DEVICE ADDRESS — H
L1D001 OR D01
(L – DENOTES LOOP #)
(D or M – DENOTES DETECTOR OR MODULE #)

1-#16/2 TWP
WIRE TYPE ABBREVIATED
CONDUCTOR COUNT
WIRE SIZE
OF CABLES (IF OMITTED ONLY 1 CABLE NEEDED)

shop drawings created by:
5794 W. 4600 So.
Hooper, UT 84315
Office: 801.985.0410
Fax: 801.704.0416
www.unicad.net
UNICAD Inc.
Fire Alarm Design & Drafting Services

REVISION	DESCRIPTION	DATE
0	ISSUED FOR REVIEW & APPROVAL	12/21/2012
1	REVISIONS PER CLIENT REVIEW	2/22/2012

MAINE STATE SECURITY ALARMS
Phone: (207) 247–4371
Toll Free: (800) 273–4371
Small Enough To Care – Large Enough To Serve
Family owned and operated – a division of L'Heureux, Inc.

MAINE STATE SECURITY Alarms 207-247-4371

119 Sherman Street Apartments
119 Sherman Street
Portland, ME 04101
FIRE ALRM PLAN

DRAWN	CWH UNICAD JOB #12056
CHECKED	WAYNE B. HAWS NICET IV 90496
DATE	2/25/2012
REVISION	1
SCALE	1/8"=1'–0"

FA-1