WIRE NOTE:
VERIFY EXACT WIRE TYPE WITH FIRE ALARM CONTRACTOR BEFORE ORDERING.

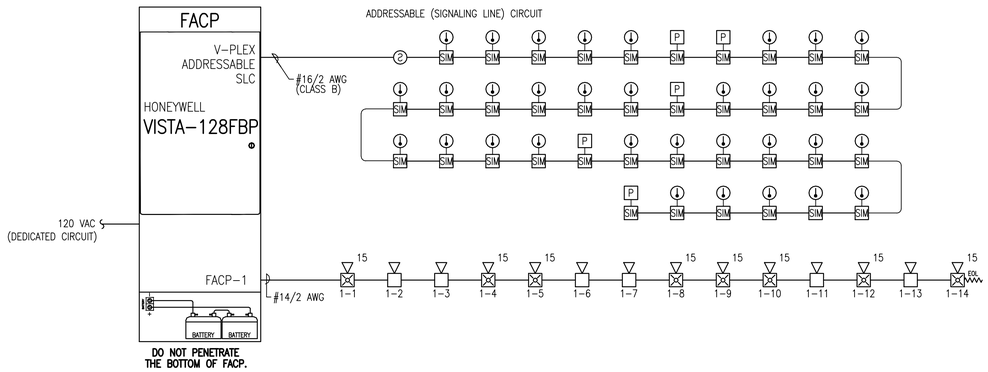

FIRE ALARM RISER DIAGRAM

SCHEMATIC: NO SCALE

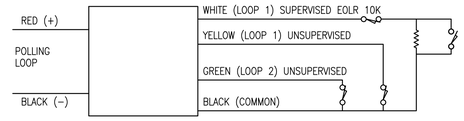

4193SN TWO ZONE SIM WIRING DETAIL

SCHEMATIC: NO SCALE

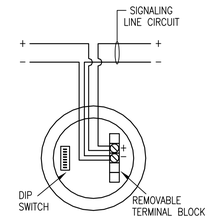

5193SD SMOKE DETECTOR WIRING DETAIL

SCHEMATIC: NO SCALE

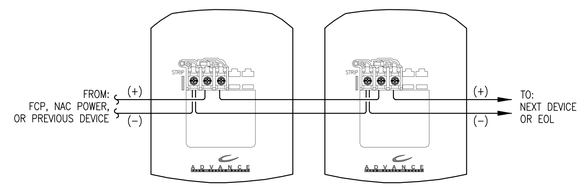

TYPICAL 2 WIRE STROBE WIRING DETAIL

SCHEMATIC: NO SCALE

Honeywell Security
Battery & Power Budget Calculator
2003 Honeywell International Inc. All Rights Reserved

Facility Information	
Location:	39 DEERING ST
Account #:	
Model:	Vista-128FBP
Engineer:	
Date:	4/12/2017

Standby and Alarm Times		Battery Contigency \%Factor
Battery Standby (hours):	24	10%
Alarm Duration (minutes):	5	
Recommended Battery (AH)	11.8	

Recommended Battery Capacity OK for 48-Hr Recharge

SELECTED PANEL MAXIMUM OUTPUT RATINGS

PANEL: Vista-128FBP	Polling\ \PLoop (mA)	Standby Auxiliary Power (mA)	Alarm Auxiliary Power (mA)	Panel Standby (mA)	Panel Alarm (mA)	Bell #1 Output (mA)	Bell #2 Output (If Used mA)	Maximum Panel Standby Output	Maximum Panel Alarm Output	Max. Battery Supported By Panel
	128	1000	1700	300	470	1700	1700	1300	2800	34.4
								Total Standby	Total Alarm	
Calculated Current Draw	25.8	0	0	Calculated Bell Draw		0	0	116	336	
								Standby Budget	Alarm Budget	
Power Budget	102.2	1000.0	1700.0	Bell Power Budget		1700.0	1700.0	1184.2	2464.2	
	Current OK	Current OK	Current OK			Current OK		Current OK	Current OK	
			External	Bell Power Req'd (mA):		0.0		Ext. UL Power Req'd (mA):		0.0

POLLING LOOP DEVICES	Enter Quantity	How many powered by 4297?	Standby (aux pwr)	Alarm Current (aux)	Polling Loop	Total Polling Loop	Total Standby Current	Total Alarm Current	Total External Current Required
4193SN TWO ZONE SIM	38	0			1.5	57			
5192SD SMOKE DETECTOR	1	0			2.8	2.8			

12V NOTIFICATION DEVICES ON \BELL OUTPUT #1	Enter Quantity	How many powered externally?	Standby (aux pwr)	Alarm Current (aux)	Polling Loop	Total Polling Loop	Total Standby Current	Total Sounder Current from Panel Bell #1	Total External Current (external)
MINI HORN	6			0.017				0.102	
HORN / STROBE 15CD	8			0.079				0.632	

Point to Point NAC Voltage Drop Calculation 4/12/2017

Project Name	39 DEERING ST			
Circuit Number	FACP-1			
Nominal System Voltage	20.4	volts	Wire Gauge	Resistance Per 1000
Minimum Device Voltage	16.0	volts		
Distance from source to 1st device		feet	14	3.07
Wire Gauge for balance of circuit			14	3.07
Max Output Current	1.70	amps		
Total Circuit Current	0.734	amps		
End of Line Voltage	19.58	volts		

Circuit is within limits

	Device Current	Distance previous device	Voltage at Device	Drop from source	Percent Drop
Device 1	0.079	0	20.40	0.000	0.00%
Device 2	0.017	20	20.32	0.080	0.39%
Device 3	0.017	35	20.18	0.218	1.07%
Device 4	0.079	20	20.11	0.294	1.44%
Device 5	0.079	45	19.96	0.444	2.17%
Device 6	0.017	25	19.89	0.515	2.52%
Device 7	0.017	10	19.86	0.542	2.66%
Device 8	0.079	30	19.78	0.621	3.04%
Device 9	0.079	30	19.71	0.686	3.36%
Device 10	0.079	30	19.66	0.735	3.60%
Device 11	0.017	25	19.64	0.765	3.75%
Device 12	0.079	30	19.60	0.797	3.91%
Device 13	0.017	25	19.59	0.812	3.98%
Device 14	0.079	20	19.58	0.822	4.03%
Totals	0.734	345			

Notes:
Wire resistance is doubled in the calculations for two wires (Positive and Negative).
The voltage calculated to the last device must not be lower than the manufactures listed minimum operating voltage (IE: rated operating voltage 16-33 VDC (24 VDC nominal)).

RESERVED FOR CITY STAMP

Reviewed for Code Compliance
Inspections Division
Portland, Maine
Date: 06/19/17

REVISION	DESCRIPTION	DATE
0	ISSUED FOR REVIEW & APPROVAL	4/12/2017

CUNNINGHAM
Security Systems
10 Princes Point Road, Yarmouth, Maine 04096
Office: 207.846.3350 • Fax: 207.846.6080

39 DEERING ST
39 DEERING ST
PORTLAND, MAINE
FIRE ALARM PLAN

DRAWN	CWS UNICAD JOB #17248
CHECKED	WAYNE B. HAWS NICET IV 90496
DATE	4/12/2017
REVISION	0
SCALE	1/8"=1'-0"

shop drawings created by:
5794 W. 4600 So.
Hooper, UT 84315
Office: 801.985.0410
UNICAD Inc.
www.unicad.net
Fire Alarm Design & Drafting Services

FA-2