RESURGAM, CITY OF PORTLAND, MAINE
Reviewed for Code Compliance
Inspections Division
Approved with Conditions
Date: 05/17/13
Planner: Tammy Munson

series 8

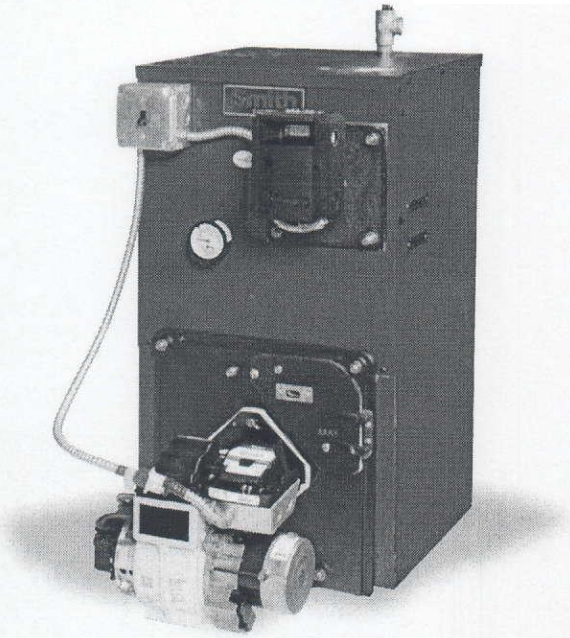

More Cast Iron Means Better Performance

The Series 8, with its rugged cast iron construction, offers commercial quality in a residential boiler. With cast iron sections, thicker and deeper than in other leading boilers, the Series 8 offers a multitude of performance advantages including higher heat retention, better combustion, quiet operation and superior steam performance. These high efficiency boilers offer exceptional efficiencies of over 85%.

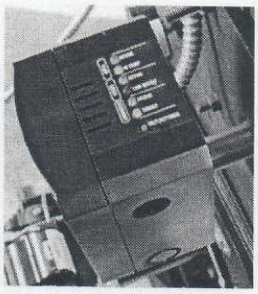

HydroStat-Universal temperature and low water cut-off combination control. (Water units only)

Extra-deep Sections

The cast iron sections of the Smith Series 8 are an extra-deep 4¾ inches. These sections offer larger water content and increased water surface area in the boiler. Corrosion and mineral build-up is minimized and maximum heat transfer is maintained. This larger water content also reduces unnecessary make-up water in steam applications and quicker start-up is facilitated by better steam generation.

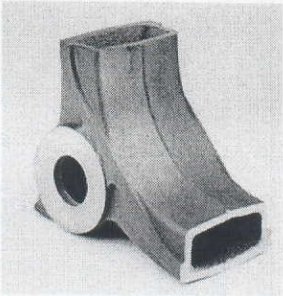

Thicker Walls and Higher Mass

The thicker walls and higher mass of the Series 8 boiler maintains a high water temperature for a greater length of time after the burner has stopped firing. This higher heat retention reduces short cycling for maximum efficiency.

Longer Combustion Chamber for Clean Combustion

With more room for the combustion process to occur, the longer chamber provides better, cleaner combustion. Decreased chance of flame impingement minimizes incomplete combustion and sooting. This longer chamber also reduces noise levels for quieter operation.

Quiet Rear Outlet Design

The rear outlet design of the Series 8 allows quieter operation. Designed to provide a sound attenuating effect much like that of a car muffler, the flue gases are routed through two turns before venting into the chimney. This advanced design offers notably reduced noise levels.

Built and Backed for a Lifetime

Without question, cast iron construction offers superior durability and longer life. Each Series 8 section is pressure tested and retested upon assembly. Your complete satisfaction on all Series 8 boilers is backed by a lifetime warranty* and our commitment to excellence.

LIFETIME WARRANTY

*See warranty statement for complete details

Reviewed for Code Compliance
Inspections Division
Approved with Conditions
Date: 05/17/13
Planner: Tammy Munson

Service Made Simple

Servicing the Series 8 is fast and easy with time-saving features such as the lift-off access panel, one piece cleanout cover plate and new swing out service hatch. Simply lift off the access panel (**A**), unscrew the wing nuts (**B**), use a standard flue brush to clean between the tapered section pins (**C**), and vacuum out the combustion chamber (**D**).

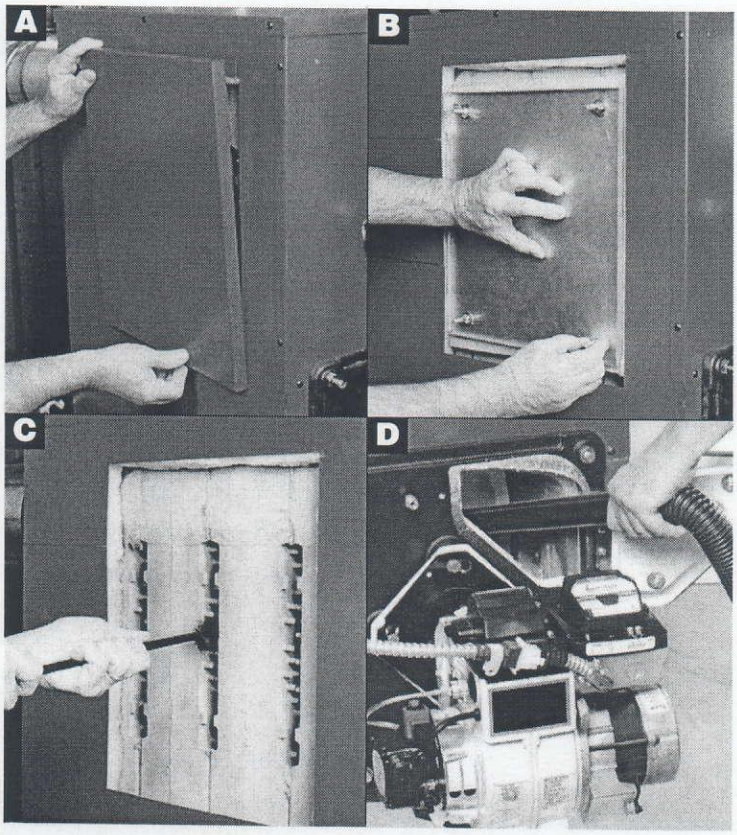

Domestic Hot Water

Enjoy ample low-cost domestic hot water without the expense of a separate water heater. Designed for installation in minutes and hassle-free removal for cleaning, the optional tankless heater is capable of producing up to 5 gallons of domestic hot water per minute.

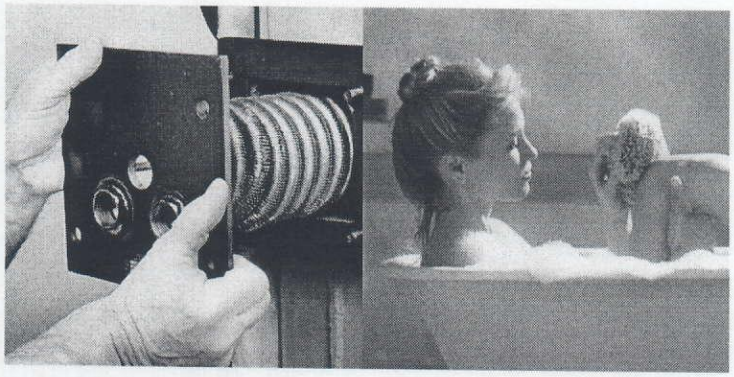

STANDARD EQUIPMENT

Steam and Water

- Cast-iron wet base sections
- Beckett AFG w/ GeniSys advanced burner control, Carlin EZ-Pro or Riello flame retention burner with nozzle
- Cast-iron smokehood
- Preformed target wall
- Cast-iron heater cover plate
- Easy access side cleanout panel
- Molex quick electrical connection for burner

Steam Only

- Hi-limit pressure control
- A.S.M.E. safety relief valve (15 psi)
- Steam pressure gauge
- Gauge glass and fittings
- Low water cutoff HydroLevel CG-450 +CGT-450

Water only

- Hydrostat 3150 combination low water cut-off and universal temperature limit control
- A.S.M.E. relief valve (30 psi)
- Theraltimeter
- Taco circulator
- Brass drain cock

OPTIONAL EQUIPMENT

Steam and Water

- Two stage fuel unit

Steam Only

- Tankless heater (side mount). Includes operating temperature (low limit) control (L4007A)

Water Only

- Tankless heater (front mount). Includes combination triple aquastat and circulator relay (L8124A)

Reviewed for Code Compliance
Inspections Division
Approved with Conditions
Date: 05/17/13
Planner: Tammy Munson

series 8

OIL FIRED RESIDENTIAL BOILER

Light Oil D.O.E. Heating capacity ratings 91,000 to 250,000 Btuh.

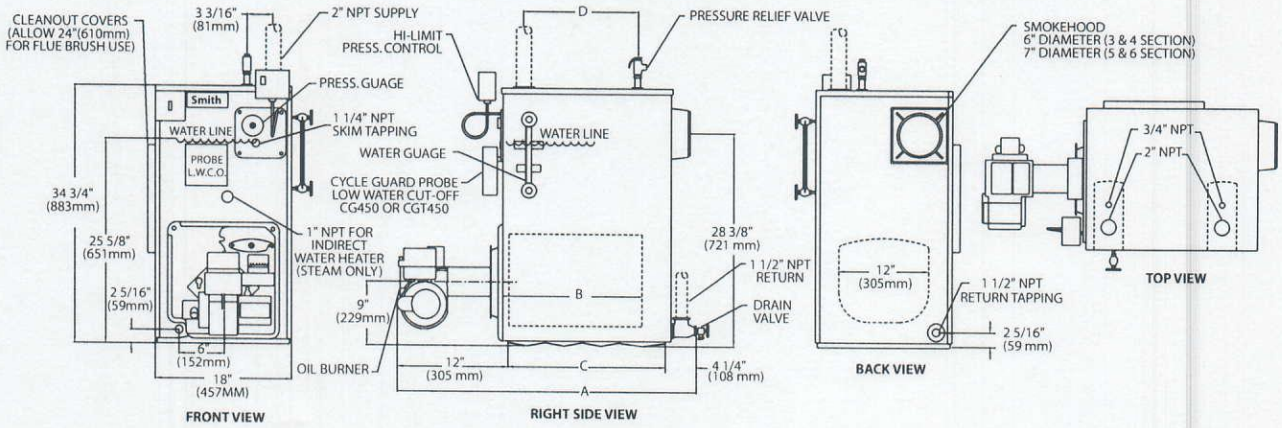

Ratings, Burner Capacities, Chimney Sizes, Dimensions

Boiler Model Number	D.O.E. Heating Capacity MBH	I=B=R Burner Capacity		I=B=R Net Ratings			Natural Draft Chimney (Note 3)	A.F.U.E. %		Overall Length (Inches) A	Chamber Length (Inches) B	Boiler Length (Inches) C	Distance between Supply Tappings (Inches) D	Square Feet of Heating Surface	Chamber Volume (Cu. Ft.)	Water Content (Gal. for Steam)	Water Content (Gal. for Water)
		(Note 2) GPH	MBH	Water (Note 1) MBH	Steam (Note 1) MBH	Sq. Ft.		Water	Steam								
8-*-3L	91	.75	105	79	68	283	8x8x18'	86.2	85.6	33"	13-3/8"	16-3/4"	10-3/4"	12.19	0.832	9.8	11.7
8-*-3H	113	.95	133	98	84	350	8x8x18'	84.1	83.4	33"	13-3/8"	16-3/4"	10-3/4"	12.19	0.832	9.8	11.7
8-*-4L	133	1.10	154	116	99	413	8x8x17'	86.2	85.5	37-3/4"	18-1/8"	21-1/2"	15-1/2"	17.55	1.128	12.3	15.1
8-*-4H	150	1.25	175	130	112	467	8x8x17'	85.4	84.7	37-3/4"	18-1/8"	21-1/2"	15-1/2"	17.55	1.128	12.3	15.1
8-*-5L	169	1.40	196	147	126	525	8x8x16'	86.2	85.3	42-1/2"	22-7/8"	26-1/4"	20-1/4"	22.91	1.423	14.9	18.5
8-*-5H	203	1.70	238	177	152	633	8x8x16'	85.1	84.5	42-1/2"	22-7/8"	26-1/4"	20-1/4"	22.91	1.423	14.9	18.5
8-*-6L	211	1.75	245	183	157	654	8x8x15'	86.2	85.1	47-1/4"	27-5/8"	31"	25"	28.29	1.719	17.4	21.9
8-*-6H	249	2.10	294	217	186	775	8x8x15'	84.8	84.3	47-1/4"	27-5/8"	31"	25"	28.29	1.719	17.4	21.9

Standard Working Pressure 30 psi Water, 15 psi Steam. All Boilers Hydrostatically tested – A.S.M.E.

* Insert "s" for steam or "w" for water.
(Note 1) Net ratings shown are based on an allowance of 1.333 for steam or 1.15 for water.
(Note 2) Light oil having heat content of 140,000 BTU/Gal.
(Note 3) Nominal clay tile liner dimensions.

In the interest of product improvement we reserve the right to make changes without notice.

Crated Outside Dimensions

Boiler Number	Length (Inches)	Width (Inches)	Height (Inches)
8-*-3	33-1/2	22	37
8-*-4	38-1/4	22	37
8-*-5	43-1/4	22	37
8-*-6	48	22	37

Tankless Water Heater Capacities

Boiler Sections	Firing Rate (GPH)	Intermittent Flow GPM (1)		Continuous Flow GPM (1)	
		Water	Steam	Water	Steam
8-*-3L	.75	2.5	2.5	1.75	1.75
8-*-3H	.95	2.5	2.5	2.0	2.0
8-*-4L	1.00	3.3	3.3	2.5	2.5
8-*-4H	1.25	3.3	3.5	2.9	2.9
8-*-5L	1.35	3.8	3.5	3.3	3.0
8-*-5H	1.65	4.5	3.5	3.9	3.0
8-*-6L	1.75	4.6	3.5	4.0	3.0
8-*-6H	2.00	5.0	3.5	4.9	3.0

(1) Temperature rise 100°F. with boiler water at 180°F.

The manufacturer should be consulted before selecting a boiler for installations having unusual piping and pick-up requirements such as intermittent system operation, extensive piping systems, etc.

If draft over the fire exceeds .04" WC or is required by local codes, barometric damper must be supplied by the installing heating contractor.

For forced hot water heating systems where the boiler and all the piping are within the area to be heated, the boiler may be selected on the basis of its D.O.E. heating capacity.

Smith
CAST IRON BOILERS
Westcast, Inc., 260 North Elm Street, Westfield, MA 01085
(413) 562-9631 • FAX: (413) 562-3799
www.smithboiler.com

A MESTEK COMPANY