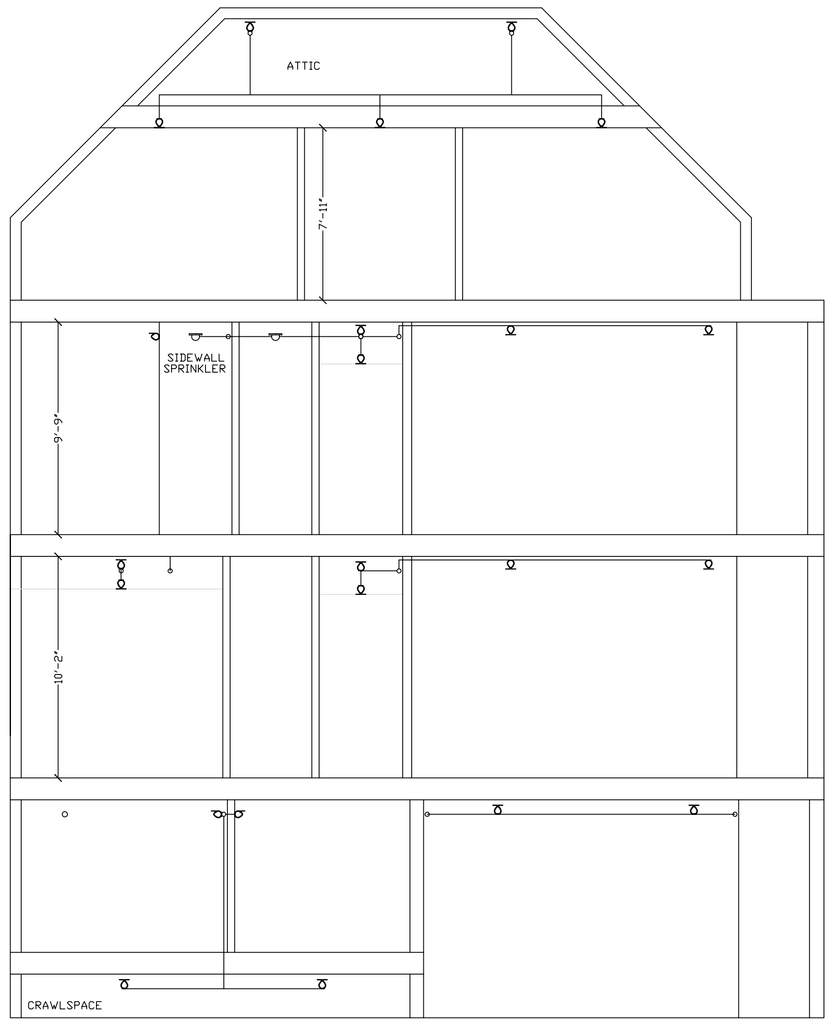

SECTION VIEW

SCALE: 1/4"=1'-0"

FIRE SPRINKLER GENERAL NOTES

OCCUPANCY: APARTMENT BUILDING AND BUSINESSES.
DESIGN STANDARD: NFPA-13 2010 LIGHT HAZARD & ORDINARY HAZARD GROUP I AND NFPA-13R 2010.
DESIGN DENSITY: 0.10/AREA, 0.15/AREA & 0.05/ AREA
SPRINKLERS UPRIGHT: TYCO (AS NOTED ON PLAN)
SPRINKLERS PENDENT: TYCO (AS NOTED ON PLAN)
ESCUTCHEONS: WHITE 2 PIECE SEMI-REC.
PIPING 1"-1½": SCH. 40 BLACK STEEL WITH THREADED ENDS.
PIPING 2"-6": SCH. 10 BLACK WITH GROOVED ENDS.
HANGERS TO BE U.L. & FM APPROVED.
AND SPACED PER NFPA-13
ALL PIPING TO BE TESTED AT 200 PSI FOR 2 HOURS.
PROVIDE TAMPER SWITCH ON ALL CONTROL VALVES.
PROVIDE HYDRAULIC NAME PLATE PER NFPA-13.
COORDINATE FIRE SPRINKLER PIPING WITH OTHER TRADES.
⟨0⟩ DENOTES HYDRAULIC REFERENCE POINTS.
-⫞- DENOTES GROOVED COUPLING IN PIPE.
RN = RISER NIPPLE.
SG = SPRIG.
DN = DROP NIPPLE.
GC = GROOVED COUPLING.
TOE = THREAD ONE END.
GBE = GROOVE BOTH ENDS.

PROTECTION OF THE SPRINKLER SYSTEM AGAINST FREEZING IS THE RESPONSIBILITY OF THE OWNER.

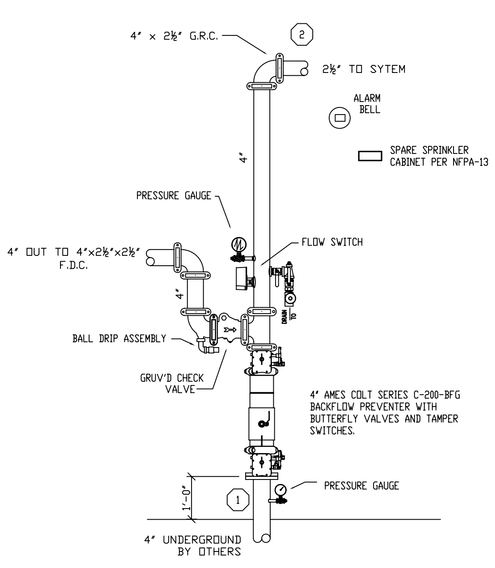

RISER DETAIL

SCALE: N.T.S.

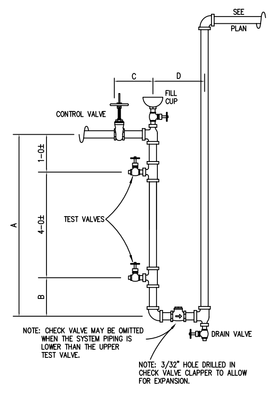

ANTIFREEZE LOOP DETAIL

(UNLESS BFP IS REQ'D. BY HEALTH DEPT.)

NOTE: SEE TRIM UNIT LITERTURE FOR MATERIAL REQUIRED.

LOOP #	A	B	C	D	DRAIN VALVE
1	5-7½	0-7½	0-5	0-8	¾
1¼	5-7½	0-7½	0-5	0-8	¾
1½	5-4½	0-4½	0-6	0-10	¾
2	5-5	0-5	0-6½	0-11	¾
2½	5-5½	0-5½	1-0½	1-4½	1¼
3	5-6	0-6	1-1½	1-6½	1¼

** ANTI-FREEZE TYPE 50/50 FACTORY PREMIX.
** TOTAL CAPACITY OF ANTIFREEZE SYSTEM = 1 GALLONS

FLOW TEST DATA

STATIC PRESSURE: 55 PSI
RESIDUAL PRESSURE: 0 PSI
QUANTITY FLOWING: 1186 GPM
SINGLE HYDRANT TEST.
AUGUST 16, 2010
PORTLAND WATER DISTRICT

SITE PLAN

SCALE: 1"=30'

N

REVISIONS	NOTES

HEAD COUNT

SPRINKLER TYPE	IDENTIFICATION NO.	MFG.	ESC.	MODEL	FINISH	ORIFICE	TEMP.	SYMBOL	QUANT.
TOTAL SPRINKLERS THIS DRAWING									

STANDARD SYMBOLS

- POST INDICATOR VALVE
- KEY VALVE
- FIRE HYDRANT
- FIRE DEPT. CONNECTION
- O.S. & Y GATE VALVE
- SWING CHECK VALVE
- NEW UNDERGROUND
- EXIST UNDERGROUND

STANDARD SYMBOLS

- ALARM CHECK VALVE
- RISER W/ALARM VALVE
- RISER W/DRY VALVE
- RISER W/ELEC. FLOW SWITCH
- RISER W/DELUGE VALVE
- WATER MOTOR BELL
- ELECTRIC BELL
- FLUSH FIRE DEPT. CONNECTION

INSPECTIONS

1.
2.
3.
4.
5.

RESPONSIBLE MANAGING SUPERVISOR #348
CONTRACTOR LICENSE #295

767 CONGRESS STREET
PORTLAND, MAINE 04102

FIRE PROTECTION PLAN

FREEDOM FIRE PROTECTION, INC.
209 QUAKER RIDGE ROAD
CASCO, MAINE 04015

JOB No.	M0168
DATE	5/8/14
DRAWN BY	MJN
SCALE	AS NOTED
SHEET No.	FP-1of3