30" x 42" - Arch E1 Size
LAST PRINTED: 5/18/2016 4:42:35 PM
LAST SAVED BY: DKTIRUPATHI
FILE PATH: Z:\CAD-Engineering - New (2011 & Newer)\Maine Projects\667 Congress - Apartments (P# 991816001)\SG Dwgs\Original Dwgs & Calcs\Original Fire Alarm Drawings\FA-702.dwg

4090-9002 IDNet SLC, INDIVIDUAL ADDRESSABLE OUTPUT MODULE RELAY (AOM)

PRODUCT INFORMATION

FEATURES:
- UL LISTED
- A SINGLE ADDRESSABLE POINT BOTH CONTROLS A 2A FORM "C" CONTACT AND TRACKS ITS STATUS
- COMPATIBLE WITH SIMPLEX MODEL 4010 AND 4100 ADDRESSABLE FIRE ALARM CONTROL PANEL
- LATCHING RELAY DESIGN ALLOWS DATA AND POWER TO BE BOTH SUPPLIED BY IDNet COMMUNICATIONS
- COMPACT, SEALED CONSTRUCTION:
  - SCREW TERMINALS FOR WIRING CONNECTIONS
  - REDUCES DUST INFILTRATION

SPECIFICATIONS:
- RELAY IAM POWER: SUPPLIED BY IDNet COMMUNICATIONS
- RELAY IAM CONTACTS (FORM "C", SPDT)
- POWER LIMITED RATING: 2A @ 24VDC, TRANSIENT SUPPRESSED LOADS, 1A @ 24VDC FOR INDUCTIVE LOADS
- NON POWER LIMITED RATING: 1/2A @ 24VAC, TRANSIENT SUPPRESSED LOADS, 1A @ 24 VDC FOR INDUCTIVE LOADS
- WIRE CONNECTIONS: SCREW TERMINALS FOR IN/OUT WIRING, #18 TO #14 AWG WIRE
- COMPATIBLE WITH SIMPLEX 2081-9044 OVER VOLTAGE PROTECTORS
- DIMENSIONS: 4 1/8"H x 4 1/8"W x 1 3/8"D (105mm x 105mm x 35mm)
- HOUSING MATERIAL: BLACK THERMOPLASTIC
- MOUNTING PLATE MATERIAL: SHEET METAL, GALVANIZED
- TEMPERATURE RANGE: 32° F TO 120° F (0° C TO 49° C) INTENDED FOR INDOOR OPERATION
- HUMIDITY RANGE UP TO 93% RH AT 100° F (38° C)

DESCRIPTION:
IDNet SLC RELAY MODULES ALLOW THE SIMPLEX FIRE ALARM CONTROL PANEL TO CONTROL A REMOTELY LOCATED FORM "C" CONTACT USING IDNet ADDRESSABLE COMMUNICATIONS FOR BOTH DATA AND POWER. TYPICAL APPLICATIONS WOULD BE FOR SWITCHING LOCAL POWER FOR CONTROL FUNCTIONS SUCH AS ELEVATOR CAPTURE, OR CONTROL OF HVAC COMPONENTS, PRESSURIZATION FANS, DAMPERS, ETC. RELAY STATUS IS ALSO COMMUNICATED REQUIRING ONLY ONE DEVICE ADDRESS.

WIRING NOTES:
1. IDNet LINES ARE TO BE #18 AWG TWISTED PAIR (CONSULT SG SALES ENGINEERING FOR EXCEPTIONS).
2. MAXIMUM ALLOWABLE LINE RUN, FROM THE F.A.C.P. TO THE FARTHEST DEVICE, NOT TO EXCEED 2500 FEET.
3. MAXIMUM QUANTITY OF DEVICES PER CIRCUIT: CONTROL PANEL MODULE DEPENDENT
4. CONTRACTOR WIRING TO RELAY CONTACTS IS UNSUPERVISED. USE #14 AWG WIRE TO LOCAL CODE.
5. RELAY CONTACTS RATED 2A, 24VDC (1A FOR INDUCTIVE LOAD) RELAY CONTACTS RATED 0.5A 120VAC (NON POWER LIMITED) FOR POWER-LIMITED OPERATION, POWER MUST BE PROVIDED FROM FACP OR POWER-LIMITED POWER SUPPLY LISTED FOR FIRE PROTECTIVE SIGNALING USE.
6. SEE INSTALLATION INSTRUCTIONS 574-184.
7. IF SHIELD IS PRESENT, CONNECT TO THE OUTGOING IDNet SHIELD TO PROVIDE A CONTINUOUS SHIELD OVER THE LENGTH OF THE IDNet CHANNEL. METHOD OF SPLICE DETERMINED BY AHJ.
8. WHEN CONNECTED TO A NON POWER-LIMITED SOURCE, THE WIRING MUST MAINTAIN A MINIMUM 1/4 INCH SEPARATION FROM IDNet WIRING.
9. WHEN USED WITH NON POWER-LIMITED SOURCE, THE "POWER LIMITED WIRING" INDICATION ON THE DEVICE LABEL MUST BE OBLITERATED.
10. WHEN BOTH POWER-LIMITED AND NON POWER-LIMITED SOURCES ARE PRESENT, USE TYPE FPL, FPLR OR FPLP POWER LIMITED CABLE FOR POWER-LIMITED CIRCUITS.
11. MAXIMUM TOTAL WIRE (INCLUDING ALL T-TAPS) ON CIRCUIT, FROM THE F.A.C.P. NOT TO EXCEED 10,000 FEET OR .58uF. (CLASS B ONLY)
12. REFER TO FIELD WIRING DIAGRAM 842-073

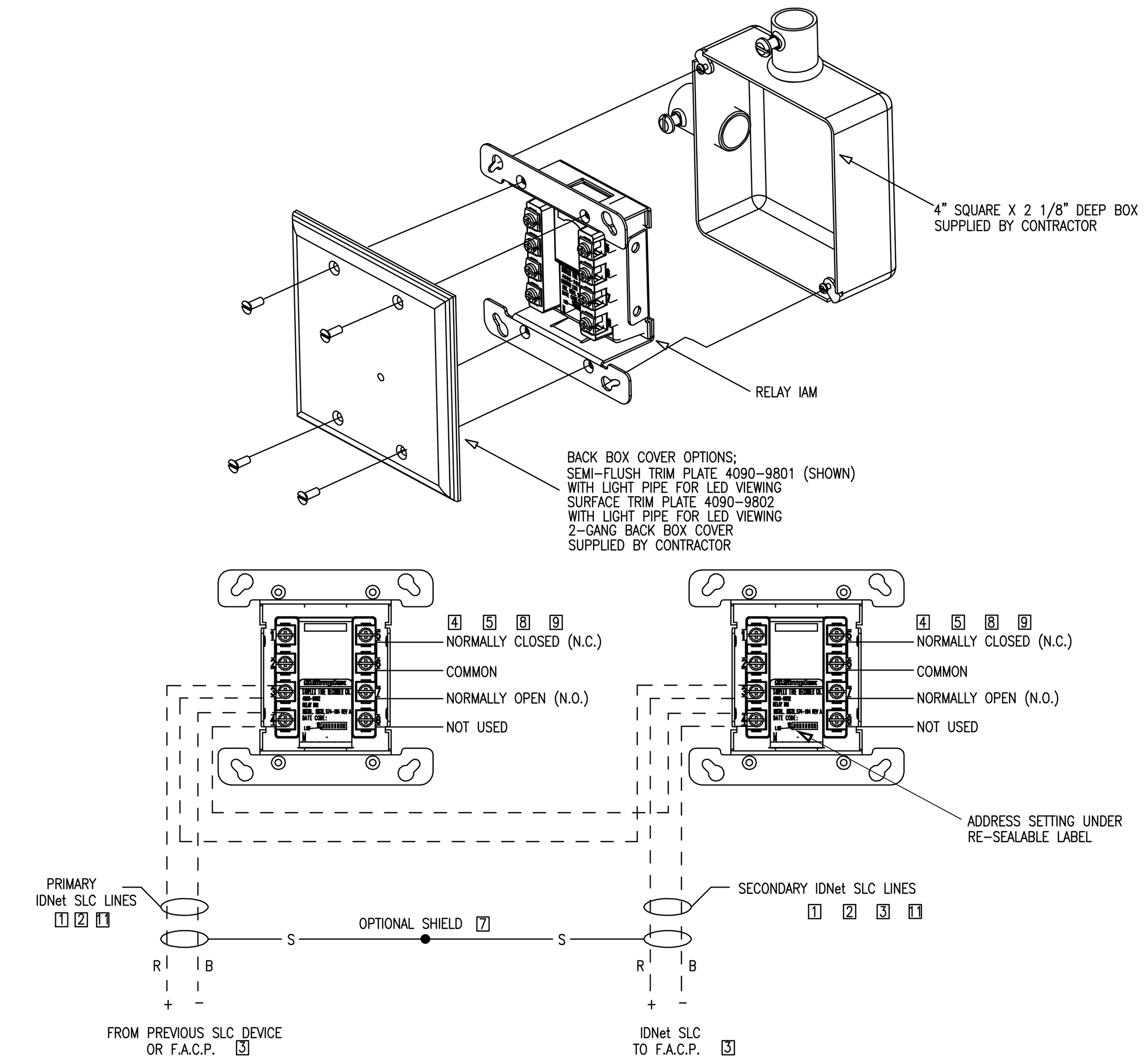

IDNET DIP SWITCH SETTINGS

IDNET ADDRESSING

DO NOT USE ADDRESS 0 FOR AN IDNET ADDRESS

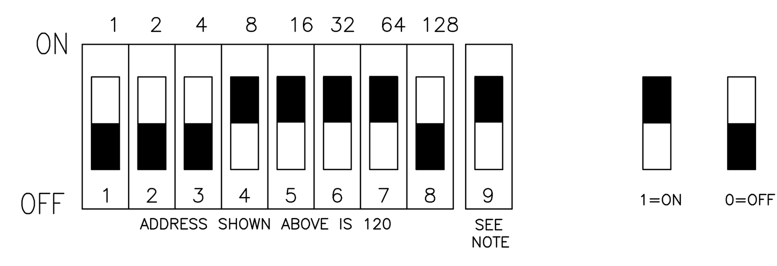

DIP SWITCHES 5 THRU 8 (columns); DIP SWITCHES 1 THRU 4 (rows)

	0000	1000	0100	1100	0010	1010	0110	1110	0001	1001	0101	1101	0011	1011	0111	1111
0000	0	16	32	48	64	80	96	112	128	144	160	176	192	208	224	240
1000	1	17	33	49	65	81	97	113	129	145	161	177	193	209	225	241
0100	2	18	34	50	66	82	98	114	130	146	162	178	194	210	226	242
1100	3	19	35	51	67	83	99	115	131	147	163	179	195	211	227	243
0010	4	20	36	52	68	84	100	116	132	148	164	180	196	212	228	244
1010	5	21	37	53	69	85	101	117	133	149	165	181	197	213	229	245
0110	6	22	38	54	70	86	102	118	134	150	166	182	198	214	230	246
1110	7	23	39	55	71	87	103	119	135	151	167	183	199	215	231	247
0001	8	24	40	56	72	88	104	120	136	152	168	184	200	216	232	248
1001	9	25	41	57	73	89	105	121	137	153	169	185	201	217	233	249
0101	10	26	42	58	74	90	106	122	138	154	170	186	202	218	234	250
1101	11	27	43	59	75	91	107	123	139	155	171	187	203	219	235	251
0011	12	28	44	60	76	92	108	124	140	156	172	188	204	220	236	252
1011	13	29	45	61	77	93	109	125	141	157	173	189	205	221	237	253
0111	14	30	46	62	78	94	110	126	142	158	174	190	206	222	238	254
1111	15	31	47	63	79	95	111	127	143	159	175	191	207	223	239	255

NOTE: THE 4098-9771, -9794, -9795, -9798 SOUNDER BASES HAVE A 9-POSITION DIP SWITCH. THE FIRST EIGHT DIP SWITCHES SET THE SOUNDER BASE ADDRESS. DIP SWITCH POSITION 9 IS SET TO OFF OR ON DEPENDING UPON THE SOUNDER BASE POWER SOURCE. WHEN THE SOUNDER BASE IS CONNECTED TO A 24 VDC POWER SOURCE, DIP SWITCH POSITION 9 IS SET TO 'OFF' AND THE 24 VDC POWER IS SUPERVISED BY THE SOUNDER BASE. WHEN THE SOUNDER BASE IS POWERED BY THE PANEL'S NOTIFICATION APPLIANCE CIRCUIT (NAC), DIP SWITCH POSITION 9 IS SET TO 'ON' AND THE POWER IS SUPERVISED BY THE NAC AND NOT THE SOUNDER BASE. THE 4098-9770 AND -9797 BASES HAVE THE SAME LAYOUT, BUT DOESN'T OFFER SOUNDER FUNCTIONALITY. THEY USE AN 8-WAY DIP SWITCH ONLY.

TrueAlert™ ES (STYLE 4 SLC) VISIBLE ONLY NOTIFICATION APPLIANCES 49VO SERIES

PRODUCT INFORMATION

FEATURES:
INDIVIDUALLY ADDRESSED WALL MOUNT VISIBLE NOTIFICATION APPLIANCES WITH EFFICIENT ELECTRONIC HIGH INTENSITY XENON STROBE PROVIDES:
- SUPERVISION OF EACH INDIVIDUAL APPLIANCE'S WIRING AND CONNECTIONS
- ABILITY TO CONNECT USING "T" TAPPING FOR CLASS B/STYLE 4 CIRCUITS TO SIMPLIFY WIRING
- HORNS CONTROLLED SEPARATELY FROM STROBES ON THE SAME 2-WIRE CIRCUIT ALLOWING "ON-UNTIL-SILENCED" AND "ON-UNTIL RESET".
- XENON STROBE OUTPUT IS MANUALLY SELECTABLE FOR 15, 30, 75, 110, 135 AND 185 CANDELA OR "FACP". THE "FACP" SETTING ALLOWS THE 4100 TO PROGRAM THE CANDELA SETTING.
- IN/OUT WIRING ACCESSIBILITY FROM FRONT OF HOUSING PROVIDES EASY ACCESS FOR INSTALLATION, INSPECTION, AND TESTING
- MAGNETIC TEST DIAGNOSTICS TO ASSIST CHECKOUT AND TESTING OF APPLIANCES AND WIRING
- UL LISTED TO STANDARD 1971

LED INDICATOR AND MAGNETIC TEST FEATURE:
- LED INDICATOR CAN BE ELECTED TO DISPLAY EACH POLLING CYCLE TO INDICATE APPLIANCE SUPERVISION
- WHEN THE TrueAlert CONTROLLER IS IN DIAGNOSTIC MODE, THE MAGNETIC TEST PULSES THE LED TO INDICATE APPLIANCE ADDRESS AND IS SELECTABLE TO ALSO BRIEFLY FLASH THE STROBE TO CONFIRM OPERATION

TrueAlert 2-WIRE ADDRESSABLE CONTROL OF VISIBLE AND AUDIBLE NOTIFICATION ACTIVATES APPLIANCES WITH:
- HORNS SOUNDED AS TEMPORAL OR MARCH TIME PATTERN, OR ON CONTINUOUSLY, CONTROLLED SEPARATELY FROM VISIBLE APPLIANCES ON THE SAME TWO-WIRE CIRCUIT

SPECIFICATIONS:
STROBE:
RATED VOLTAGE RANGE: 17 TO 31 VRMS
SUPERVISORY REQUIREMENTS: 1 UNIT LOAD
STROBE FLASH RATE: 1 Hz

APPLIANCE CONFIGURATION SETTINGS
POSITION 1: CONFIGURATION CONTROL - LOCAL (OFF), PANEL (ON)
POSITION 2: AUDIBLE VOLUME - HIGH (OFF), LOW (ON)
POSITION 3: CANADIAN HORN MODE - SET TO OFF
POSITION 4: LEGACY NAC MODE - SET TO OFF
POSITION 5,6,7: UNUSED - SET TO OFF
POSITION 8: CLEAR/COLOR LENS - ALARM (OFF), ALERT (ON)

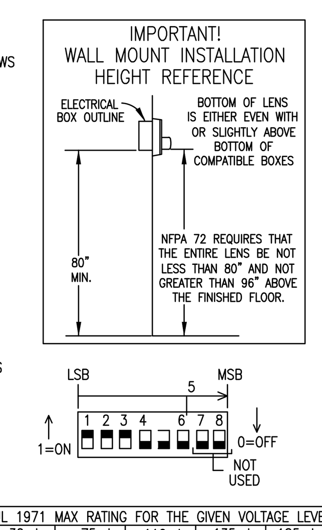

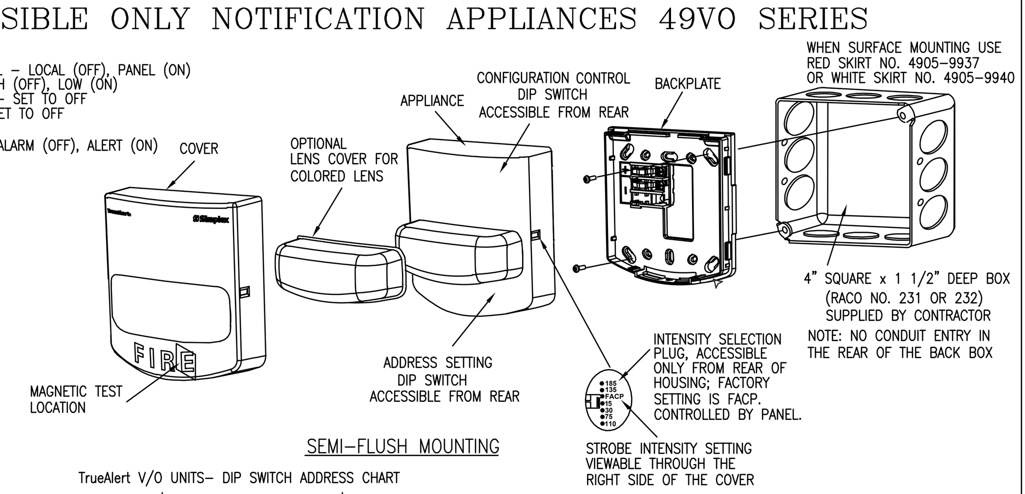

TrueAlert V/O UNITS- DIP SWITCH ADDRESS CHART

RESERVED FOR FUTURE USE; DIP SWITCHES 5 & 6 (columns); DIP SWITCHES 1 THRU 4 (rows)

	0000	1000	0100	1100
0000	0	16	32	48
1000	1	17	33	49
0100	2	18	34	50
1100	3	19	35	51
0010	4	20	36	52
1010	5	21	37	53
0110	6	22	38	54
1110	7	23	39	55
0001	8	24	40	56
1001	9	25	41	57
0101	10	26	42	58
1101	11	27	43	59
0011	12	28	44	60
1011	13	29	45	61
0111	14	30	46	62
1111	15	31	47	63

MOUNTING INSTRUCTIONS:
1. BRING THE BUILDING WIRING THROUGH THE RECTANGULAR OPENING IN THE BACKPLATE.
2. CONNECT THE BUILDING WIRES TO THE BACKPLATE.
3. SECURE THE BACKPLATE TO THE ELECTRICAL BOX BY USING THE PROVIDED HARDWARE. INSTALLED WITH THE WRITING "INSTALL THIS SIDE UP" AT THE TOP.
4. ATTACH THE COVER TO THE APPLIANCE.
5. SET THE APPLIANCE ADDRESS AND CONFIGURATION SETTINGS.
6. ATTACH THE ASSEMBLED APPLIANCE ONTO THE BACKPLATE.

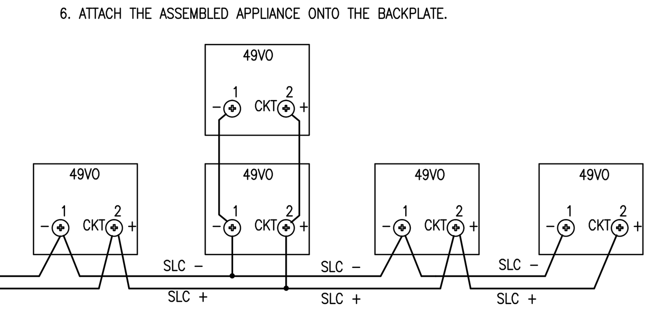

CURRENT VALUES ARE UL 1971 MAX RATING FOR THE GIVEN VOLTAGE LEVEL

MODEL NUMBER	COVER COLOR	LETTERING COLOR	LENS COLOR	VOLTAGE	15cd	30cd	75cd	110cd	135cd	185cd
49VO-WRF(-BA)	RED	WHITE	CLEAR	23 VRMS	0.047	0.057	0.100	0.132	0.160	0.208
				17 VRMS	0.062	0.075	0.133	0.178	**0.214	**0.281
			AMBER/BLUE	23 VRMS	0.054	0.078	0.128	0.184	0.211	NOT SUPPORTED
				17 VRMS	0.067	0.103	0.171	0.250	**0.282	
49VO-WWF(-BA)	WHITE	RED	GREEN		*10cd	*20cd	*45cd	*75cd	*95cd	
				23 VRMS	0.054	0.078	0.128	0.184	0.211	
				17 VRMS	0.067	0.103	0.171	0.250	**0.282	
			RED		*3cd	*7cd	*15cd	*30cd	*37cd	
				23 VRMS	0.054	0.078	0.128	0.184	0.211	
				17 VRMS	0.067	0.103	0.171	0.250	**0.282	

* VISIBLE OUTPUT RATING FOR THE GIVEN LENS COVER COLOR AT THE APPLIANCE SETTING.
** 17 VOLT CURRENT SHOWN AT THE HIGH CANDELA SETTINGS IS FOR USE WITH 4009T ONLY.

WIRING NOTES:
1. REFER TO FIELD WIRING DIAGRAMS OF THE DRIVING TrueAlert COMPATIBLE CONTROLLER FOR ADDITIONAL SLC WIRING INFORMATION.
2. NOTIFICATION APPLIANCES ARE RATED PER INDIVIDUAL NAMEPLATE LABEL.
3. MAINTAIN CORRECT POLARITY ON TERMINAL CONNECTIONS. DO NOT LOOP WIRES UNDER TERMINALS.
4. ALL TrueAlert SLC WIRING CONNECTIONS ARE SUPERVISED AND POWER-LIMITED.
5. POWERING THE V/O FROM AN APPLIANCE POWER SOURCE LESS THAN 17 VDC OR GREATER THAN 32 VDC MAY CAUSE PERMANENT DAMAGE.
6. THE TrueAlert V/O CAN ONLY BE OPERATED THROUGH A 4009 TrueAlert ADDRESSABLE CONTROLLER OR TrueAlert COMPATIBLE FACP.

GENERAL SPECIFICATIONS:
HOUSING DIMENSIONS (INCLUDING LENS): 5 1/8" H X 5" W X 2 5/8" D (130 mm X 127 mm X 67 mm)
TEMPERATURE RANGE: 32° TO 120° F (0° TO 49° C)
HUMIDITY RANGE: 10% TO 93% NON-CONDENSING AT 104° F (40° C)
CONNECTIONS: TERMINAL BLOCKS FOR 18 TO 12 AWG

TrueAlert™ ES (STYLE 4 SLC) VISIBLE ONLY NOTIFICATION APPLIANCES 49VO SERIES WEATHERPROOF

PRODUCT INFORMATION

FEATURES:
INDIVIDUALLY ADDRESSED WALL MOUNT VISIBLE NOTIFICATION APPLIANCES WITH EFFICIENT ELECTRONIC HIGH INTENSITY XENON STROBE PROVIDES:
- SUPERVISION OF EACH INDIVIDUAL APPLIANCE'S WIRING AND CONNECTIONS
- ABILITY TO CONNECT USING "T" TAPPING FOR CLASS B/STYLE 4 CIRCUITS TO SIMPLIFY WIRING
- HORNS CONTROLLED SEPARATELY FROM STROBES ON THE SAME 2-WIRE CIRCUIT ALLOWING "ON-UNTIL-SILENCED" AND "ON-UNTIL RESET".
- XENON STROBE OUTPUT IS MANUALLY SELECTABLE FOR 15, 30, 75, 110, 135 AND 185 CANDELA OR "FACP". THE "FACP" SETTING ALLOWS THE 4100 TO PROGRAM THE CANDELA SETTING.
- IN/OUT WIRING ACCESSIBILITY FROM FRONT OF HOUSING PROVIDES EASY ACCESS FOR INSTALLATION, INSPECTION, AND TESTING
- MAGNETIC TEST DIAGNOSTICS TO ASSIST CHECKOUT AND TESTING OF APPLIANCES AND WIRING
- UL LISTED TO STANDARD 1971

LED INDICATOR AND MAGNETIC TEST FEATURE:
- LED INDICTOR CAN BE ELECTED TO DISPLAY EACH POLLING CYCLE TO INDICATE APPLIANCE SUPERVISION
- WHEN THE TrueAlert CONTROLLER IS IN DIAGNOSTIC MODE, THE MAGNETIC TEST PULSES THE LED TO INDICATE APPLIANCE ADDRESS AND IS SELECTABLE TO ALSO BRIEFLY FLASH THE STROBE TO CONFIRM OPERATION

TrueAlert 2-WIRE ADDRESSABLE CONTROL OF VISIBLE AND AUDIBLE NOTIFICATION ACTIVATES APPLIANCES WITH:
- HORNS SOUNDED AS TEMPORAL OR MARCH TIME PATTERN, OR ON CONTINUOUSLY, CONTROLLED SEPARATELY FROM VISIBLE APPLIANCES ON THE SAME TWO-WIRE CIRCUIT

TrueAlert NOTIFICATION APPLIANCE DESIGN PROVIDES FLEXIBLE, EASY, AND CONVENIENT FLUSH OR SURFACE WALL BOX MOUNTING

SPECIFICATIONS:
STROBE:
RATED VOLTAGE RANGE: 23 TO 31 VRMS
SUPERVISORY REQUIREMENTS: 1 UNIT LOAD
STROBE FLASH RATE: 1 Hz

APPLIANCE CONFIGURATION SETTINGS
POSITION 1: CONFIGURATION CONTROL - LOCAL (OFF), PANEL (ON)
POSITION 2: AUDIBLE VOLUME - HIGH (OFF), LOW (ON)
POSITION 3: CANADIAN HORN MODE - SET TO OFF
POSITION 4: LEGACY NAC MODE - SET TO OFF
POSITION 5,6,7: UNUSED - SET TO OFF
POSITION 8: CLEAR/COLOR LENS - ALARM (OFF), ALERT (ON)

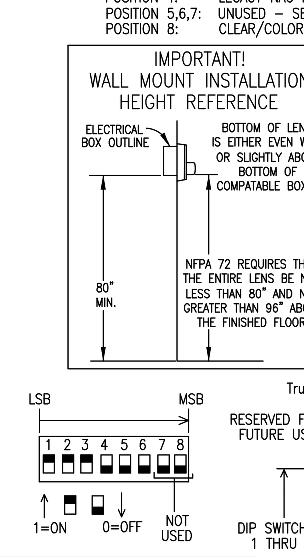

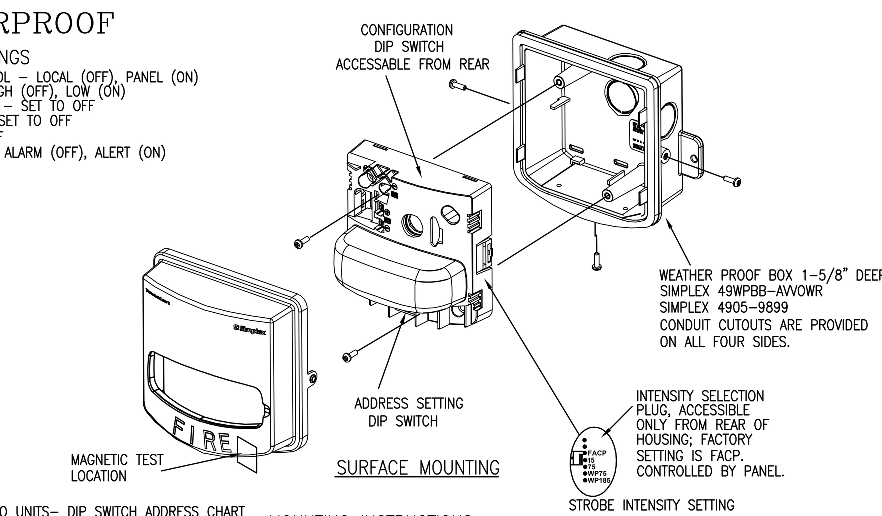

TrueAlert V/O UNITS- DIP SWITCH ADDRESS CHART

RESERVED FOR FUTURE USE; DIP SWITCHES 5 & 6 (columns); DIP SWITCHES 1 THRU 4 (rows)

	0000	1000	0100	1100
0000	0	16	32	48
1000	1	17	33	49
0100	2	18	34	50
1100	3	19	35	51
0010	4	20	36	52
1010	5	21	37	53
0110	6	22	38	54
1110	7	23	39	55
0001	8	24	40	56
1001	9	25	41	57
0101	10	26	42	58
1101	11	27	43	59
0011	12	28	44	60
1011	13	29	45	61
0111	14	30	46	62
1111	15	31	47	63

MODEL NUMBER	HOUSING COLOR	LETTERING COLOR	VOLTAGE	UL 1971 0°-49° C 15cd	UL 1971 75cd	UL 1638 TO 0° C WP 75cd	UL 1638 TO 0° C WP 185cd	UL 1638 TO -35° C WP 75cd	UL 1638 TO -35° C WP 185cd
49VO-WRFO(-BA)	RED	WHITE	23 VRMS	0.060	0.160	0.160	0.185	0.212	0.239
49VO-WWFO-BA	WHITE	RED	23 VRMS	0.060	0.160	0.160	0.185	0.212	0.239
49VO-APPLW-O	WP BACKBOX AND COVER ORDERED SEPARATELY		23 VRMS	0.060	0.160	0.160	0.185	0.212	0.239

MODEL NUMBER	HOUSING COLOR	LETTERING COLOR	VOLTAGE	ULC RATINGS 20cd	30cd	75cd
49VO-APPLW-CO	WP BACKBOX AND COVER ORDERED SEPARATELY		23 VRMS	0.143	0.150	0.168
49VO-WRFO-C	RED	WHITE	23 VRMS	0.143	0.150	0.168

GENERAL SPECIFICATIONS:
HOUSING DIMENSIONS (INCLUDING LENS): 5 1/8" H X 5" W X 2 5/8" D (130 mm X 127 mm X 67 mm)
TEMPERATURE RANGE: -31° TO 120° F (-35° TO 49° C)
HUMIDITY RANGE: 10% TO 93% NON-CONDENSING AT 104° F (40° C)
CONNECTIONS: TERMINAL BLOCKS FOR 18 TO 12 AWG

MOUNTING INSTRUCTIONS:
1. SET THE APPLIANCE ADDRESS AND CONFIGURATION SETTINGS.
2. BRING THE BUILDING WIRING THROUGH THE RECTANGULAR OPENING IN THE APPLIANCE.
3. ASSEMBLE THE HOUSING ONTO THE WEATHERPROOF BACKBOX ASSURING EVEN CONTACT WITH THE GASKET AROUND THE PERIPHERY.
4. USING THE MOUNTING HOLES INDICATED IN THE FIGURE ABOVE, ASSEMBLE THE HOUSING TO THE BACKBOX. TIGHTEN THE SCREWS TO RECOMMENDED TORQUE
5. ASSEMBLE THE COVER TO THE WEATHERPROOF BACKBOX USING THE SCREWS PROVIDED. TIGHTEN THE SCREWS TO RECOMMENDED TORQUE.

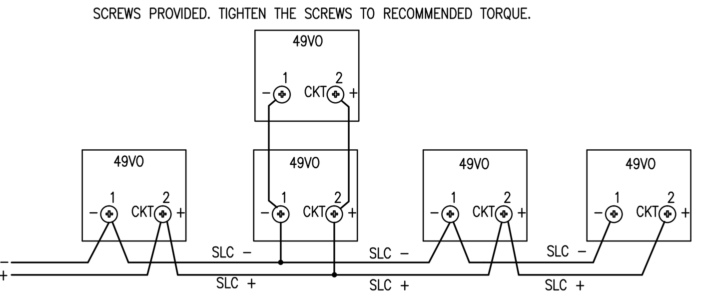

WIRING NOTES:
1. REFER TO FIELD WIRING DIAGRAMS OF THE DRIVING TrueAlert COMPATIBLE CONTROLLER FOR ADDITIONAL SLC WIRING INFORMATION.
2. NOTIFICATION APPLIANCES ARE RATED PER INDIVIDUAL NAMEPLATE LABEL.
3. MAINTAIN CORRECT POLARITY ON TERMINAL CONNECTIONS. DO NOT LOOP WIRES UNDER TERMINALS.
4. ALL TrueAlert SLC WIRING CONNECTIONS ARE SUPERVISED AND POWER-LIMITED.
5. POWERING THE V/O FROM AN APPLIANCE POWER SOURCE LESS THAN 17 VDC OR GREATER THAN 32 VDC MAY CAUSE PERMANENT DAMAGE. TO THE V/O UNIT.
6. THE TrueAlert V/O CAN ONLY BE OPERATED THROUGH A 4009 TrueAlert ADDRESSABLE CONTROLLER OR TrueAlert COMPATIBLE FACP.

WHEELOCK MULTI-CANDELA STROBE RSS-24MCW-FW & RSS-24MCW-FR

SPECIFICATIONS INFORMATION

MODEL NUMBER	INPUT VOLTAGE VDC	REGULATED VOLTAGE RANGE VDC/FWR	STROBE CANDELA	HOUSING COLOR
RSS-24MCW-FR	24	16.0-33.0	15, 30, 75, 110	RED
RSS-24MCW-FW				WHITE

AVERAGE CURRENT

AVERAGE CURRENT RATINGS (AMPS)

VOLTAGE	15cd	30cd	75cd	110cd
16.0 VDC	.060	.092	.165	.220
18.0 VDC	.053	.082	.147	.196
24.0 VDC	.041	.063	.109	.140

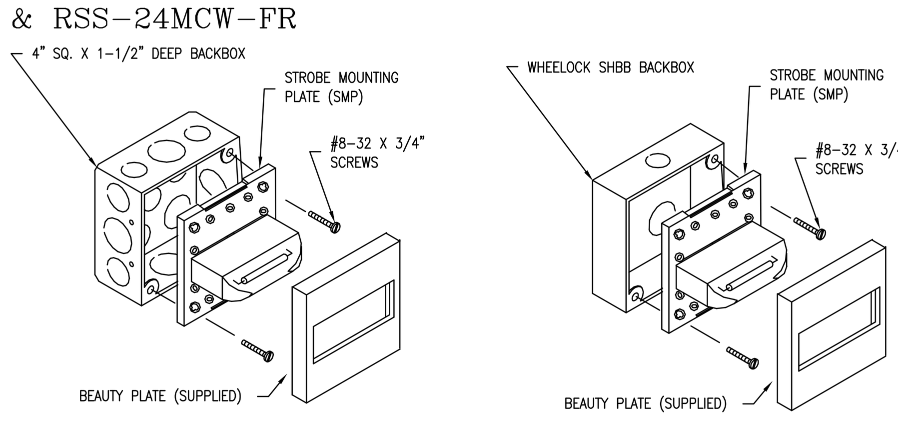

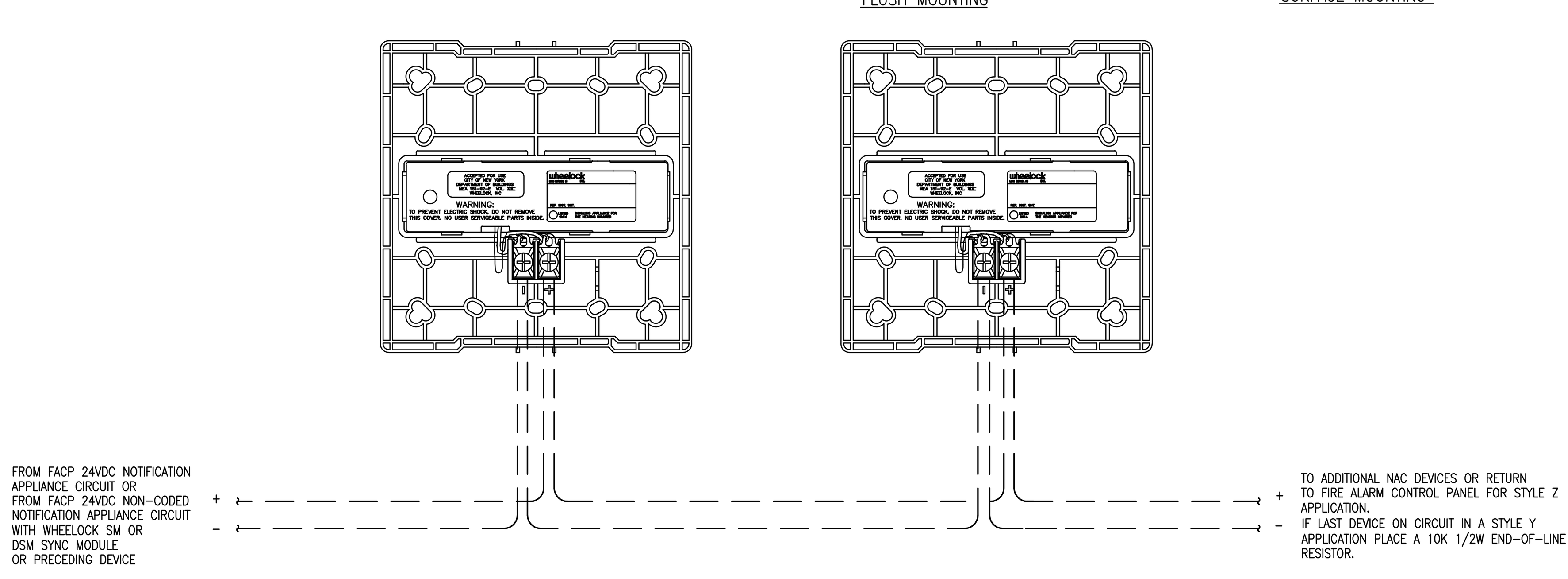

WHEELOCK ET70-24MCW-FR MULTI-CANDELA SPEAKER STROBE

FEATURES:
- COLOR RED WITH WHITE LETTERING.
- UL LISTED TO STANDARD 1971 & 1480
- STROBES PRODUCE 1 FLASH PER SECOND OVER THE REGULATED VOLTAGE RANGE.
- FIELD SELECTABLE TAPS FOR 25 OR 70 VRMS OPERATION FROM 1/8 TO 8 WATTS.
- SYNCHRONIZE WITH WHEELOCK SM, DSM OR PS-12/24-8 POWER SUPPLY WITH WHEELOCK'S BUILT-IN SYNC PROTOCOL.
- HIGH EFFICIENCY DESIGN FOR MAXIMUM OUTPUT AT MINIMUM WATTAGE ACROSS A FREQUENCY RANGE OF 400 TO 4000HZ.
- FAST INSTALLATION WITH IN/OUT SCREW TERMINALS USING #12 TO #18 AWG WIRES.

SPEAKER dBA AT 10 FEET (RATED WATTS)

1/8	1/4	1/2	1	2	4	8
78.5	81.5	84.4	87.2	90.1	92.8	94.9

RATED AVERAGE CURRENT

VOLTAGE	15 CANDELA	30 CANDELA	75 CANDELA	110 CANDELA
16VDC	.060	.092	.165	.220
18VDC	.053	.082	.147	.196
24VDC	.041	.063	.109	.140

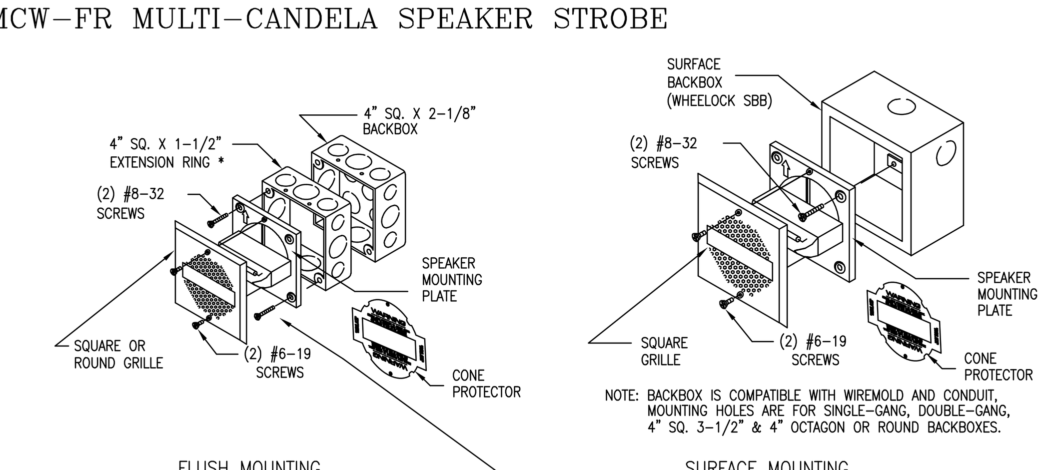

NOTE: BACKBOX IS COMPATIBLE WITH WIREMOLD AND CONDUIT, MOUNTING HOLES ARE FOR SINGLE-GANG, DOUBLE-GANG, 4" SQ. 3-1/2" & 4" OCTAGON OR ROUND BACKBOXES.

TO SET STROBE CANDELLA RATING LOCATE THE SWITCH BELOW THE STROBE HOUSING AND SELECT THE DESIRED CANEDELA

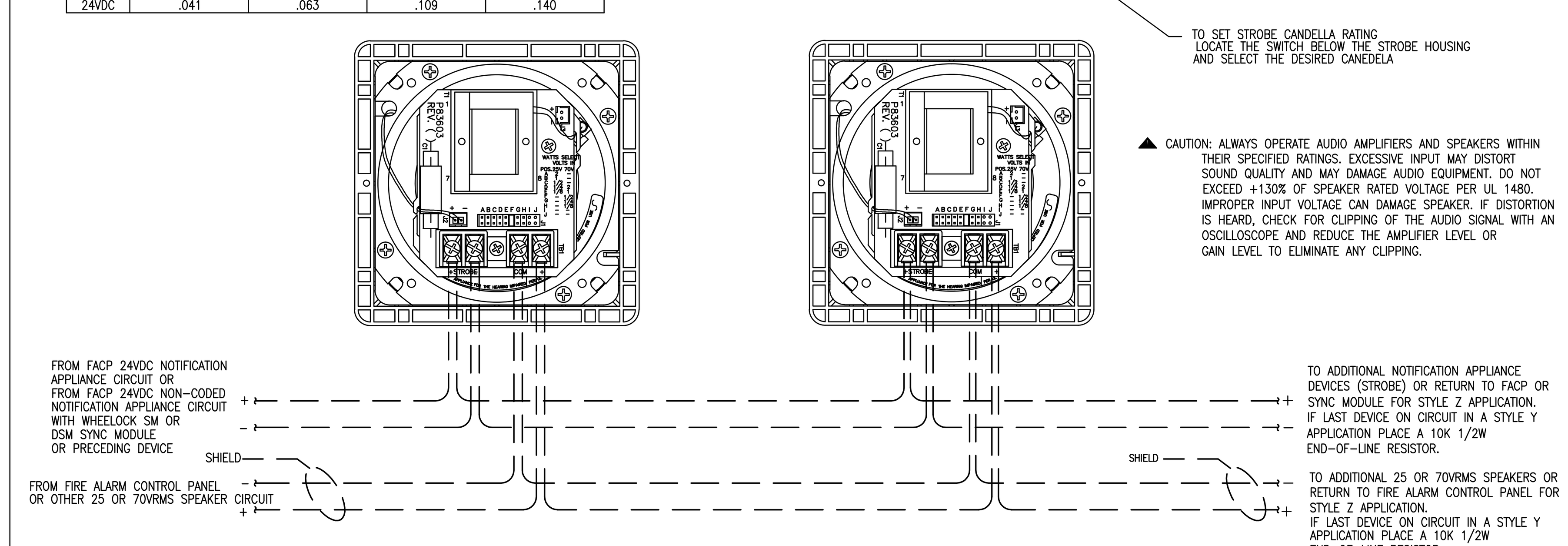

▲ CAUTION: ALWAYS OPERATE AUDIO AMPLIFIERS AND SPEAKERS WITHIN THEIR SPECIFIED RATINGS. EXCESSIVE INPUT MAY DISTORT SOUND QUALITY AND MAY DAMAGE AUDIO EQUIPMENT. DO NOT EXCEED +130% OF SPEAKER RATED VOLTAGE PER UL 1480. IMPROPER INPUT VOLTAGE CAN DAMAGE SPEAKER. IF DISTORTION IS HEARD, CHECK FOR CLIPPING OF THE AUDIO SIGNAL WITH AN OSCILLOSCOPE AND REDUCE THE AMPLIFIER LEVEL OR GAIN LEVEL TO ELIMINATE ANY CLIPPING.

tyco SimplexGrinnell
Safer. Smarter. Tyco.™
DISTRICT - 147
30 THOMAS DRIVE
WESTBROOK, ME 04092
SERVICE: 207-842-6440
PHONE: 207-842-6440
FAX: 207-842-6439

667 CONGRESS STREET APARTMENTS

667 CONGRESS STREET APARTMENTS
667 CONGRESS STREET
PORTLAND, ME 04101

Revisions shown with ▲ symbol

ISSUE LOG: MARK	DATE	CAD	CHK	DESCRIPTION

DRAWN BY:	DINESH KUMAR
CHECKED BY:	M VAUGHN
ISSUE DATE:	5/4/16
JOB #:	147426142
PROJECT #:	147:991816001

SIMPLEXGRINNELL © 2016

SYSTEM: FIRE ALARM SYSTEM

SHEET: WIRING TYPICALS

FA-702

IMPORTANT NOTICE TO USER: By accepting or using this drawing and/or the information contained herein, the user agrees to the following terms and conditions: The electronic information in the drawing may be subject to intentional or unintentional alteration. Any use, reuse, copying modification or alteration of the information contained herein shall be at the sole risk of the user. This information may not be sold or transferred to any third party, used on other projects or additions to the project for which it was prepared, or used for completion of this project by any third party. SimplexGrinnell disclaims all liability for the use or reuse of altered files by the user or any third party and such use will be a user's sole risk. User shall, to the fullest extent permitted by law, defend, indemnify, and hold SimplexGrinnell harmless from any and all claims for loss, damage or injury arising directly or indirectly therefrom.