DEVICE MOUNTING HEIGHT REFERENCE (PER NFPA 72)

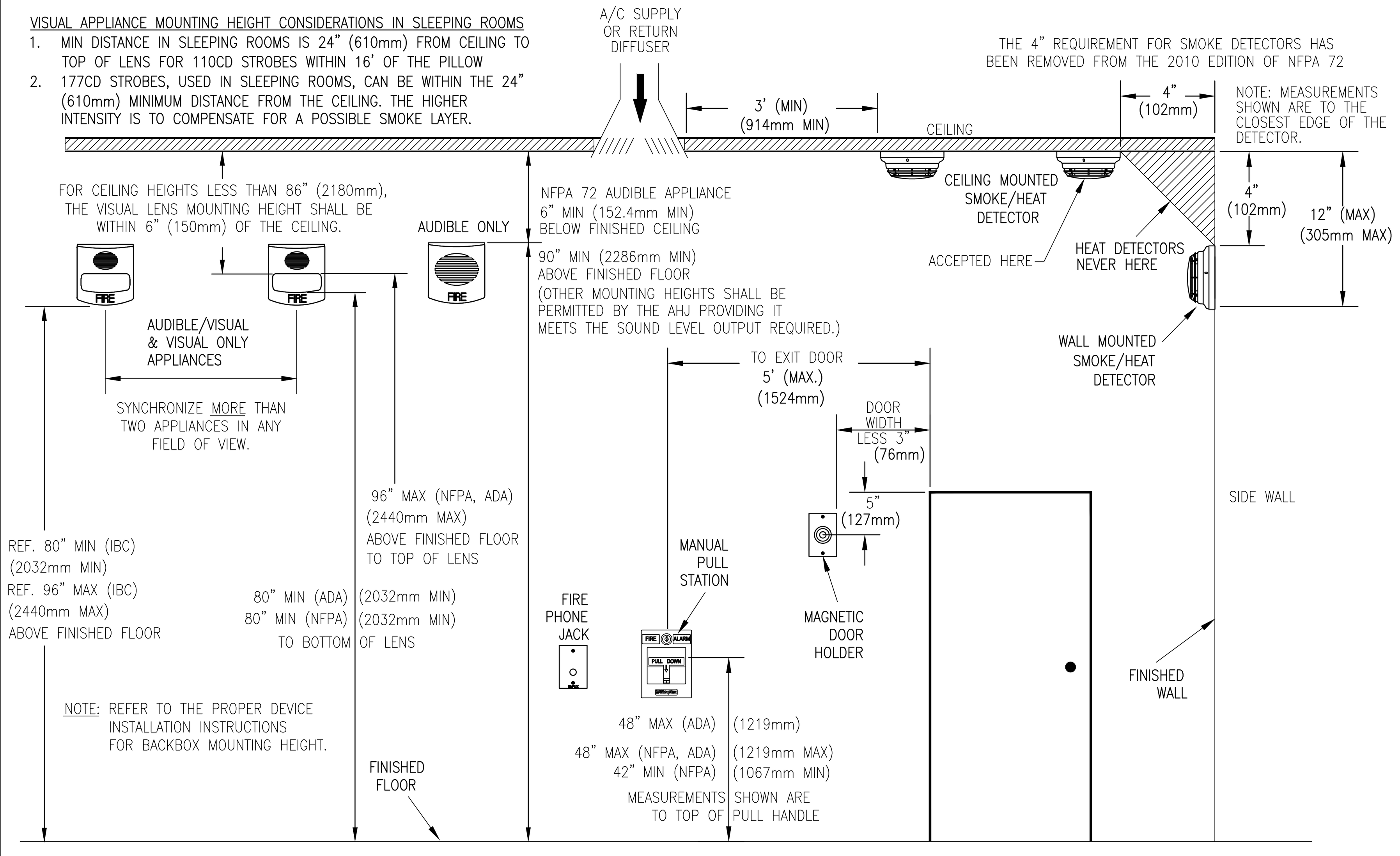

4099-9006 IDNet SLC DOUBLE ACTION PUSH MANUAL STATION

PRODUCT INFORMATION

FEATURES:
- UL LISTED
- DOUBLE ACTION (PUSH/PULL), IDNet SLC ADDRESSABLE
- PULL LEVEL PROTRUDES WHEN ALARMED
- LED INDICATOR FLASHES DURING COMMUNICATION
- TAMPER RESISTANT RESET KEY LOCK
- MOUNTING: SEMI-FLUSH, SURFACE
- OPERATING TEMPERATURE RANGE: 32 – 120° F
- OPERATING HUMIDITY RANGE: 0 – 93% RH
- ADAPTER PLATES 2099-9813 OR 2099-9814 CAN BE USE FOR RETROFIT APPLICATIONS.
- 5" HIGH X 3 3/4" WIDE X 1" DEEP
- SCREW TERMINALS FOR 18 TO 14 AWG WIRE
- ADDRESSED BY MEANS OF AN 8 POSITION DIP SWITCH
- COMPATIBLE WITH IDNet SLC/MAPNET

OPERATION:

ACTIVATION:
4099-9006 DOUBLE ACTION STATION REQUIRES A FIRM DOWNWARD PULL TO ACTIVATE THE ALARM SWITCH. COMPLETING THIS ACTION BREAKS AN INTERNAL PLASTIC BREAK-ROD THAT IS VISIBLE BELOW THE PULL LEVER (USE OF PLASTIC ROD IS OPTIONAL). THE PULL LEVEL LATCHES INTO THE ALARM POSITION AND REMAINS EXTENDED OUT OF THE HOUSING TO PROVIDE A VISIBLE INDICATION.

RESETTING
4099-9006 DOUBLE ACTION STATION REQUIRES A KEY TO RESET THE ACTIVATION LEVER AND DEACTIVATE THE ALARM SWITCH. (IF OPTIONAL PLASTIC BREAK ROD WAS USED IT MUST BE REPLACED)

CONSTRUCTION:
STATION HOUSING AND PULL LEVER ARE CONSTRUCTED OF CHIP RESISTANT AND DIRT RESISTANT, HIGH IMPACT LEXAN. HOUSING IS RED WITH RAISED WHITE LETTERING AND PULL LEVER IS WHITE WITH RED RAISED LETTERING.
* LEXAN IS A REGISTERED TRADEMARK OF THE GENERAL ELECTRIC CO.

APPLICATION:
PULL STATIONS SHALL BE INSTALLED IN ACCORDANCE WITH NFPA 72 AND ADA GUIDE LINES.

INTRODUCTION:
THE 4099-9006 ADDRESSABLE PULL STATION PROVIDES TWO-STATE STATUS INFORMATION (NORMAL AND SHORT) TO THE IDNet SLC COMPATIBLE FIRE ALARM CONTROL PANEL (FACP) VIA THE IDNet SLC CHANNEL. THE IDNet SLC CHANNEL PROVIDES THE COMMUNICATION LINK BETWEEN PULL STATION AND THE FACP AND POWERS THE ENTIRE CIRCUITRY.

WIRING:
1. ALL WIRING TO COMPLY WITH LOCAL CODE.
2. CONDUCTORS MUST TEST FREE OF ALL GROUNDS.
3. MAINTAIN CORRECT POLARITY
4. IDNet SLC LINES ARE TO BE 18 AWG TWISTED SHIELDED PAIR
5. MAXIMUM LINE RUN FROM PANEL TO FARTHEST DEVICE NOT TO EXCEED 2500 FEET.
6. MAXIMUM TOTAL WIRE (INCLUDING ALL T-TAPS) FROM PANEL NOT TO EXCEED 10,000 FEET.
7. MAXIMUM QUANTITY OF DEVICES PER CIRCUIT: 250
8. TERMINALS 1 AND 2 FOR FIELD WIRING. TERMINALS 3 AND 4 ARE FACTORY WIRING.
9. WIRE NUT, SPLICE, OR SOLDER THE SHIELD WIRES.
10. IF SHIELD IS PRESENT, IT SHOULD BE CONNECTED TO THE OUTGOING IDNet SHIELD TO PROVIDE A CONTINUOUS SHIELD OVER THE LENGTH OF THE IDNet SLC CHANNEL. SHIELD SHOULD BE INSULATED FROM THE ELECTRICAL BOX.
11. SEE INSTALLATION INSTRUCTIONS 574-332

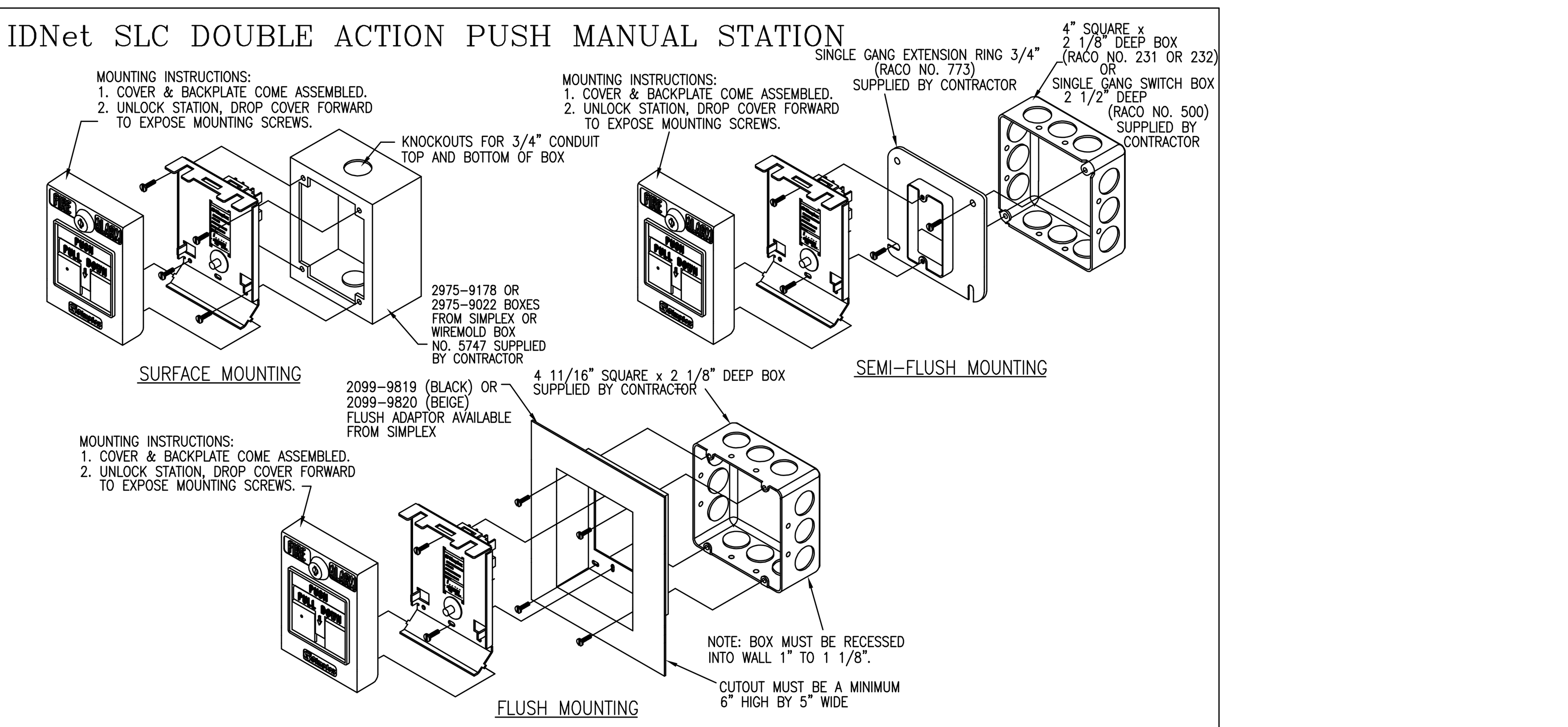

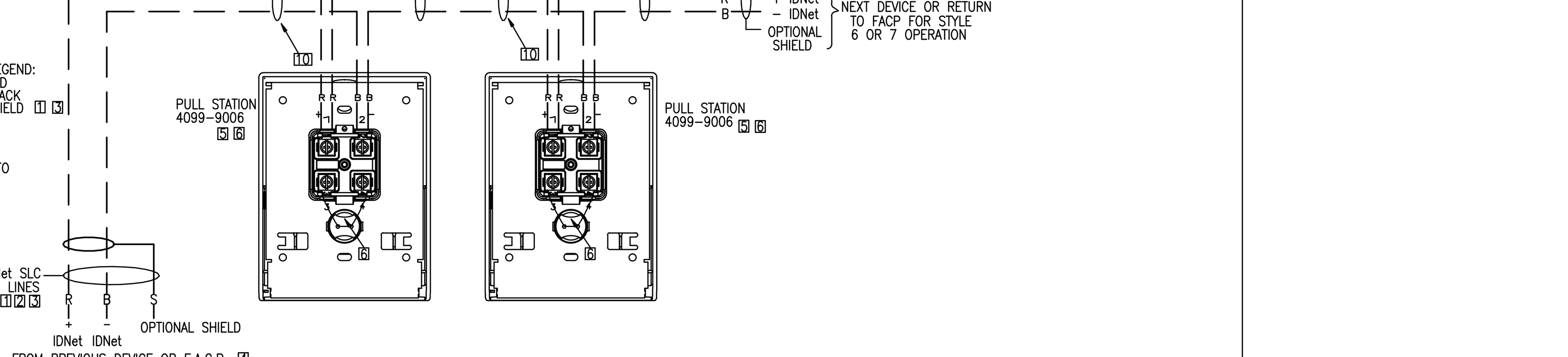

4098-9792 STANDARD SENSOR BASE

PRODUCT INFORMATION

FEATURES:
- UL LISTED, FM APPROVED
- TRUEALARM ANALOG SENSING PROVIDES DIGITAL TRANSMISSION OF ANALOG SENSOR VALUES VIA MAPNETII, OR IDNet SLC TWO WIRE COMMUNICATIONS
- FIRE ALARM CONTROL PANEL PROVIDES:
  - –INDIVIDUAL SENSITIVITY SELECTION FOR EACH SENSOR
  - –PEAK VALUE LOGGING ALLOWING ACCURATE ANALYSIS FOR SENSITIVITY SELECTION
  - –AUTOMATIC ENVIRONMENTAL COMPENSATION
  - –DISPLAY OF SENSITIVITY IN PERCENT PER FOOT
  - –MULTISTAGE ALARM OPERATION
  - –ABILITY TO DISPLAY AND PRINT DETAILED SENSOR INFORMATION IN PLAIN ENGLISH LANGUAGE
- PHOTOELECTRIC SMOKE SENSOR 4098-9714: SEVEN LEVELS OF SENSITIVITY FROM 0.2% TO 3.7%
- IONIZATION SMOKE SENSOR 4098-9717: FOUR LEVELS OF SENSITIVITY FROM 0.5% TO 1.7%.
- HEAT SENSOR 4098-9733:
  - –RATE-OF-RISE TEMPERATURE DETECTION IS SELECTABLE AT THE CONTROL PANEL FOR EITHER 15°F OR 20°F PER MINUTE
  - –FIXED TEMPERATURE SENSING IS INDEPENDENT OF RATE-OF-RISE AND PROGRAMMABLE TO OPERATE AT 135°F OR 155°F
  - –TRUEALARM HEAT SENSORS CAN BE PROGRAMMED AS A UTILITY DEVICE TO MONITOR FOR TEMPERATURE EXTREMES IN THE RANGE FROM 32° F TO 120° F.
- UL STANDARD SPACING:
  - –60 FT SPACING FOR 135° F
  - –40 FT SPACING FOR 155° F
- INTEGRAL RED LED FOR POWER-ON (PULSING), OR ALARM OR TROUBLE (STEADY ON)
- BASE MOUNTED ADDRESS SELECTION:
  - –ACCESSIBLE FROM FRONT (DIP SWITCH UNDER SENSOR)
  - –ADDRESS REMAINS WITH ITS PROGRAMMED LOCATION
- FOR USE WITH SIMPLEX 4010, 4100, 4020, AND 4120 SERIES CONTROL PANELS.
- MAXIMUM QUANTITY OF DEVICES:
  - –127 FOR 4020, 4100, 4120
  - –250 FOR 4010, 4100
- MOUNTING: CEILING OR WALL
- COLOR : FROST WHITE
- BASE DIMENSIONS: 15/16" X 4-7/8"

SPECIFICATIONS:
- UL LISTED TEMPERATURE RANGE: 32°F TO 100°F
- OPERATING TEMPERATURE RANGE: 32°F TO 120°F
- HUMIDITY RANGE: 10% TO 95% RH
- PHOTOELECTRIC SENSOR AIR VELOCITY RANGE: 0-2000 FT/MIN
- IONIZATION SENSOR AIR VELOCITY RANGE: 0-300 FT/MIN
- WIRING CONNECTIONS: SCREW TERMINALS FOR IN/OUT WIRING, #18 TO #14 AWG
- COMMUNICATIONS MAPNETII/IDNet SLC: 1 ADDRESS PER BASE
  VOLTAGE (MAPNETII/IDNet SLC): 24-40VDC
  CURRENT: 400uA TYPICAL

DESCRIPTION:
TRUEALARM SENSOR BASES CONTAIN INTEGRAL ADDRESSABLE ELECTRONICS THAT CONSTANTLY MONITOR THE STATUS OF THE DETACHABLE PHOTOELECTRIC, IONIZATION, OR HEAT SENSORS. EACH SENSOR'S OUTPUT IS DIGITIZED AND TRANSMITTED TO THE SYSTEM FIRE ALARM CONTROL PANEL EVERY FOUR SECONDS. SINCE TRUEALARM SENSORS USE THE SAME BASE, DIFFERENT SENSOR TYPES CAN BE EASILY INTERCHANGED TO MEET SPECIFIC LOCATION REQUIREMENTS. THIS FEATURE ALLOWS INTENTIONAL SENSOR SUBSTITUTION DURING BUILDING CONSTRUCTION. WHEN CONDITIONS ARE TEMPORARILY DUSTY, INSTEAD OF COVERING THE SMOKE SENSORS. HEAT SENSORS MAY BE INSTALLED WITHOUT REPROGRAMMING THE CONTROL PANEL, ALTHOUGH THE CONTROL PANEL WILL INDICATE AN INCORRECT SENSOR TYPE, THE HEAT SENSOR WILL OPERATE AS A DEFAULT SENSITIVITY PROVIDING HEAT DETECTION FOR BUILDING PROTECTION AT THAT LOCATION.

WIRING:
1. ALL WIRING TO COMPLY WITH LOCAL CODE.
2. CONDUCTORS MUST TEST FREE OF ALL GROUNDS.
3. MAINTAIN CORRECT POLARITY
4. MAPNETII/IDNet SLC WIRING TO BE #18 AWG TWISTED SHIELDED PAIR
5. IF SHIELD IS PRESENT, CONNECT TO THE OUTGOING IDNet SLC SHIELD TO PROVIDE A CONTINUOUS SHIELD OVER THE LENGTH OF THE IDNet SLC CHANNEL. METHOD OF SPLICE DETERMINED BY AHJ.
6. REFER TO INSTALLATION INSTRUCTIONS (574-707)
7. REFER TO APPLICATION MANUAL (574-709)

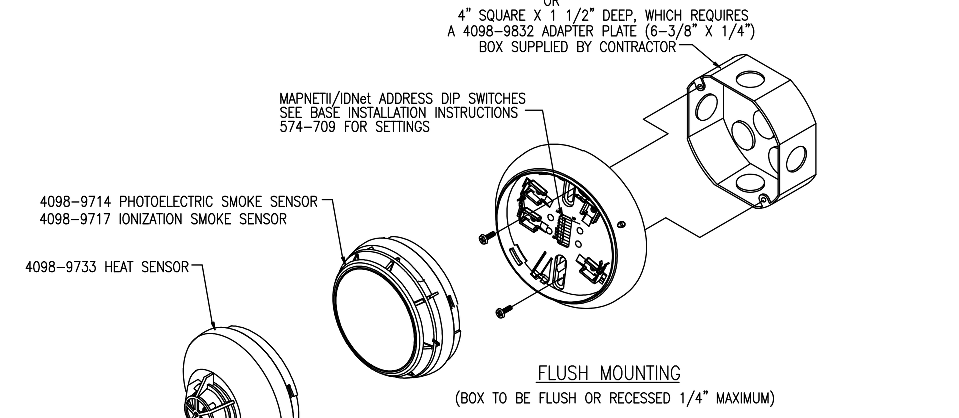

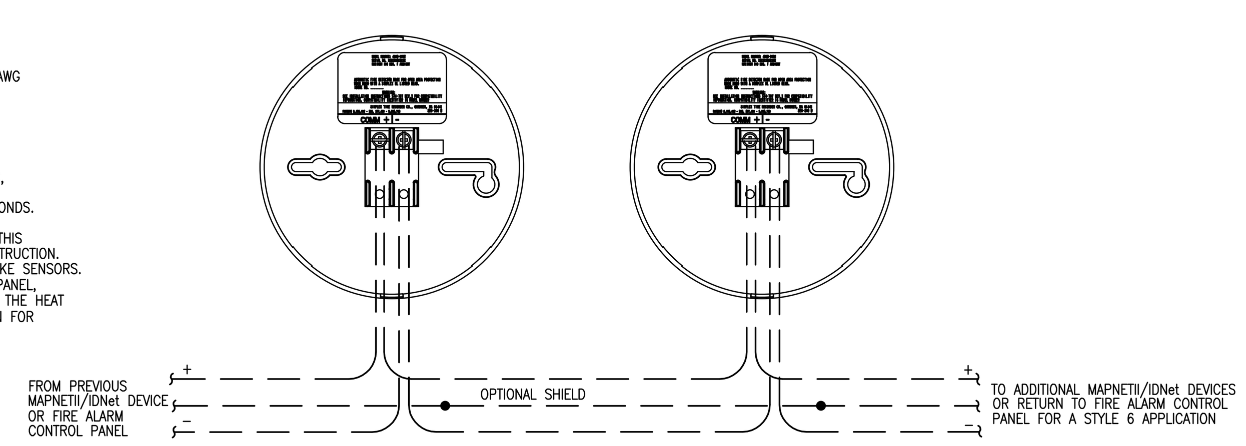

4098-9754 MULTI-SENSOR W/4098-9792 STANDARD SENSOR BASE

PRODUCT INFORMATION

FEATURES:
- UL LISTED, FM APPROVED
- TRUEALARM ANALOG SENSING PROVIDES DIGITAL TRANSMISSION OF ANALOG SENSOR VALUES VIA IDNet SLC TWO WIRE COMMUNICATIONS
- TRUEALARM PHOTOELECTRIC SENSING AND TRUEALARM THERMAL SENSING COMBINED IN ONE HOUSING
- FIRE ALARM CONTROL PANEL PROVIDES:
  - –INDIVIDUAL SENSITIVITY SELECTION FOR EACH SENSOR
  - –PEAK VALUE LOGGING ALLOWING ACCURATE ANALYSIS FOR SENSITIVITY SELECTION
  - –AUTOMATIC ENVIRONMENTAL COMPENSATION
  - –DISPLAY OF SENSITIVITY IN PERCENT PER FOOT
  - –MULTISTAGE ALARM OPERATION
  - –ABILITY TO DISPLAY AND PRINT DETAILED SENSOR INFORMATION IN PLAIN ENGLISH LANGUAGE
- PHOTOELECTRIC SMOKE SENSING PORTION: SEVEN LEVELS OF SENSITIVITY FROM 0.2% TO 3.7%
- HEAT SENSOR ELEMENT:
  - –RATE-OF-RISE TEMPERATURE DETECTION IS SELECTABLE AT THE CONTROL PANEL FOR EITHER 15°F OR 20°F PER MINUTE
  - –FIXED TEMPERATURE SENSING IS INDEPENDENT OF RATE-OF-RISE AND PROGRAMMABLE TO OPERATE AT 135°F OR 122°F
  - –TRUEALARM HEAT SENSORS CAN BE PROGRAMMED AS A UTILITY DEVICE TO MONITOR FOR TEMPERATURE EXTREMES IN THE RANGE FROM 32° F TO 120° F.
- STANDARD BASE 4098-9792:
  - –USES ONLY ONE IDNet SLC ADDRESS POINT, HOWEVER, TAKES UP TWO POINTS OF THE SYSTEM CAPACITY.
  - –INTEGRAL RED LED FOR POWER-ON (PULSING), OR ALARM OR TROUBLE (STEADY ON)
  - BASE MOUNTED ADDRESS SELECTION:
  - –ACCESSIBLE FROM FRONT (DIP SWITCH UNDER SENSOR)
  - –ADDRESS REMAINS WITH ITS PROGRAMMED LOCATION
  - –FOR USE WITH SIMPLEX 4100 SERIES CONTROL PANELS.
- MOUNTING: CEILING OR WALL
- COLOR : FROST WHITE
- BASE DIMENSIONS: 15/16" X 4-7/8"

SPECIFICATIONS:
- UL LISTED TEMPERATURE RANGE: 32°F TO 100°F (0° C TO 38° C)
- OPERATING TEMPERATURE RANGE: 32°F TO 120°F (0° C TO 50° C)
- HUMIDITY RANGE: 10% TO 95% RH
- PHOTOELECTRIC SENSOR AIR VELOCITY RANGE: 0-2000 FT/MIN (0-610 M/MIN)
- WIRING CONNECTIONS: SCREW TERMINALS FOR IN/OUT WIRING, #18 TO #14 AWG
- COMMUNICATIONS IDNet SLC: 1 ADDRESS PER BASE
  VOLTAGE (IDNet SLC): 24-40VDC
  CURRENT: 400uA TYPICAL
- ALTITUDE: UP TO 8000 FT. (2.4km)

DESCRIPTION:
TRUEALARM MULTI-SENSOR 4098-9754 COMBINES THE ESTABLISHED PERFORMANCE OF A TRUEALARM PHOTOELECTRIC SMOKE SENSOR WITH A FAST-ACTING AND ACCURATE TRUEALARM THERMAL SENSOR TO PROVIDE BOTH FEATURES IN A SINGLE SENSOR/BASE ASSEMBLY

WIRING:
1. ALL WIRING TO COMPLY WITH LOCAL CODE.
2. CONDUCTORS MUST TEST FREE OF ALL GROUNDS.
3. MAINTAIN CORRECT POLARITY
4. IDNet SLC WIRING TO BE #18 AWG TWISTED SHIELDED PAIR
5. IF SHIELD IS PRESENT, CONNECT TO THE OUTGOING IDNet SLC SHIELD TO PROVIDE A CONTINUOUS SHIELD OVER THE LENGTH OF THE IDNet SLC CHANNEL. METHOD OF SPLICE DETERMINED BY AHJ.

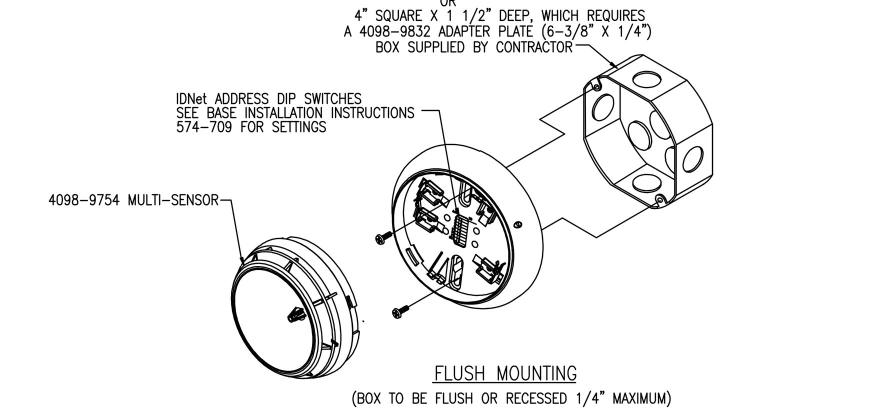

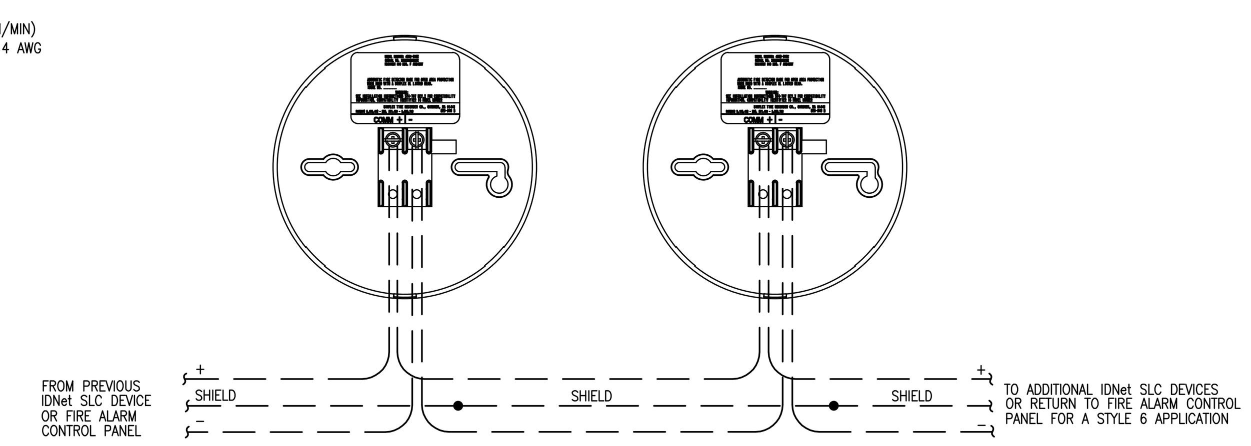

4098-9770 CO SENSOR BASE

PRODUCT INFORMATION

FEATURES:
- UL LISTED TO STANDARD 268, SMOKE DETECTORS FOR FIRE ALARM SIGNALING SYSTEMS AND STANDARD 2075, GAS AND VAPOR DETECTORS AND SENSORS; ALLOWING SYSTEMS TO BE LISTED TO STANDARD 2034, SINGLE AND MULTIPLE STATION CARBON MONOXIDE ALARMS.
- CO SENSOR BASES SUPPORT (AND REQUIRE) A TRUEALARM PHOTOELECTRIC, PHOTO/HEAT, HEAT, OR IONIZATION SENSOR.
  - – PHOTOELECTRIC SMOKE SENSOR 4098-9714: SEVEN LEVELS OF SENSITIVITY FROM 0.2% TO 3.7%
  - – IONIZATION SMOKE SENSOR 4098-9717: FOUR LEVELS OF SENSITIVITY FROM 0.5% TO 1.7%.
  - – HEAT SENSOR 4098-9733:
    - –RATE-OF-RISE TEMPERATURE DETECTION IS SELECTABLE AT THE CONTROL PANEL FOR EITHER 15°F (-9°C) OR 20°F (-6.7°C) PER MINUTE
    - –FIXED TEMPERATURE SENSING IS INDEPENDENT OF RATE-OF-RISE AND PROGRAMMABLE TO OPERATE AT 135°F (57°C) OR 155°F (68°C)
    - –TRUEALARM HEAT SENSORS CAN BE PROGRAMMED AS A UTILITY DEVICE TO MONITOR FOR TEMPERATURE EXTREMES IN THE RANGE FROM 32° F TO 155° F (0° C TO 68° C).
    - UL STANDARD SPACING: 60 FT (18.3 M) SPACING FOR 135°F (57°C); 40 FT (12.2 M) SPACING FOR 155° F (68°C)
- CO SENSOR BASES ARE MULTI-POINT DEVICES, CONSUME ONLY ONE IDNet SLC ADDRESS, AND RECEIVE BOTH COMMUNICATIONS AND SENSOR POWER FROM THE IDNet SLC CHANNEL.
- MAGNETIC TEST FEATURE
- LOCKING ANTI-TAMPER DESIGN
- INTEGRAL RED LED FOR POWER-ON (PULSING), OR ALARM OR TROUBLE (STEADY ON)
- BASE MOUNTED ADDRESS SELECTION:
  - –ACCESSIBLE FROM FRONT (DIP SWITCH UNDER SENSOR)
  - –ADDRESS REMAINS WITH ITS PROGRAMMED LOCATION
- FOR USE WITH SIMPLEX 4100 SERIES CONTROL PANELS.
- MAXIMUM QUANTITY OF DEVICES: 250 FOR 4100 IDNet SLC CHANNEL
- MOUNTING: CEILING OR WALL
- COLOR : FROST WHITE
- BASE DIMENSIONS: 1-1/8" X 6-7/16" (2.85 CM X 16.5 CM)
- FIRE ALARM CONTROL PANEL PROVIDES:
  - –INDIVIDUAL SENSITIVITY SELECTION FOR EACH SENSOR
  - –PEAK VALUE LOGGING ALLOWING ACCURATE ANALYSIS FOR SENSITIVITY SELECTION
  - –AUTOMATIC ENVIRONMENTAL COMPENSATION
  - –DISPLAY OF SENSITIVITY IN PERCENT PER FOOT
  - –MULTISTAGE ALARM OPERATION
  - –ABILITY TO DISPLAY AND PRINT DETAILED SENSOR INFORMATION IN PLAIN ENGLISH LANGUAGE

SPECIFICATIONS:
- UL LISTED TEMPERATURE RANGE: 32°F TO 100°F (0°C TO 38°C)
- OPERATING TEMPERATURE RANGE: 32°F TO 122°F (0°C TO 50°C)
- HUMIDITY RANGE: 10% TO 95% RH
- PHOTOELECTRIC SENSOR AIR VELOCITY RANGE: 0-2000 FT/MIN (610 M/MIN)
- IONIZATION SENSOR AIR VELOCITY RANGE: 0-300 FT/MIN (91 M/MIN)
- CO SENSOR SPECIFICATIONS

UL 2034 REQUIREMENTS REFERENCE	70 PPM CONCENTRATION	ALARM WINDOW 60 TO 240 MINUTES
	150 PPM CONCENTRATION	ALARM WINDOW 10 TO 50 MINUTES
	400 PPM CONCENTRATION	ALARM WINDOW 4 TO 15 MINUTES

DESCRIPTION:
TRUEALARM SENSOR BASES CONTAIN INTEGRAL ADDRESSABLE ELECTRONICS THAT CONSTANTLY MONITOR THE STATUS OF THE DETACHABLE PHOTOELECTRIC, IONIZATION, OR HEAT SENSORS. EACH SENSOR'S OUTPUT IS DIGITIZED AND TRANSMITTED TO THE SYSTEM FIRE ALARM CONTROL PANEL EVERY FOUR SECONDS.

THREE TYPES OF CO INFLUENCED OPERATION ARE AVAILABLE; UL 2034 CO ALARM DETECTION; UL 2075 CO (OSHA) LEVEL MONITORING FOR VENTILATION CONTROL; AND MULTI-CRITERIA FIRE SENSOR ANALYSIS WITH ALGORITHMS THAT COMBINES OPTICAL AND CO GAS MONITORING INFORMATION OPERATION OF A CO SENSOR BASE WITH A PHOTOELECTRIC OR A PHOTO/HEAT SENSOR ALLOWS:
- – INDEPENDENT SENSOR OPERATION OR SELECTABLE MULTI-SENSOR MODES OF FALSE ALARM REDUCTION OR FASTER DETECTION
- – FALSE ALARM REDUCTION ANALYZES CO AND PHOTOELECTRIC SENSOR INFORMATION TOGETHER TO PROVIDE A SOPHISTICATED REJECTION OF NON-FIRE CONDITIONS NORMALLY TROUBLESOME AS FALSE ALARMS (STEAM, DUST, AEROSOLS, ETC.)
- – FASTER DETECTION (INCREASED SENSITIVITY) ALGORITHM ANALYZES CO AND PHOTOELECTRIC SENSOR INFORMATION TO ALLOW THE PRESENCE OF CO TO IMPLEMENT AN INCREASED PHOTOELECTRIC SENSITIVITY FOR HIGH VALUE LOCATIONS (MUSEUMS, ELECTRICAL EQUIPMENT ROOMS, ETC.)

WIRING NOTES:
1. ALL WIRING TO COMPLY WITH LOCAL CODE.
2. CONDUCTORS MUST TEST FREE OF ALL GROUNDS.
3. MAINTAIN CORRECT POLARITY
4. IDNet SLC WIRING TO BE #18 AWG TWISTED SHIELDED PAIR
5. REFER TO INSTALLATION INSTRUCTIONS (574-707)
6. REFER TO APPLICATION MANUAL (574-709)
7. IF SHIELD IS PRESENT, CONNECT TO THE OUTGOING IDNet SLC SHIELD TO PROVIDE A CONTINUOUS SHIELD OVER THE LENGTH OF THE IDNet SLC CHANNEL. METHOD OF SPLICE DETERMINED BY AHJ.

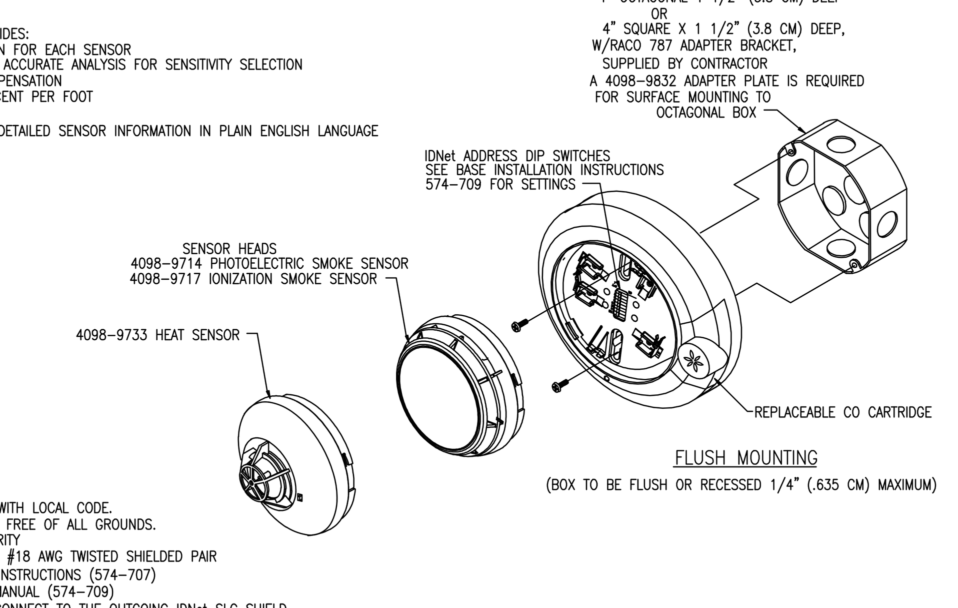

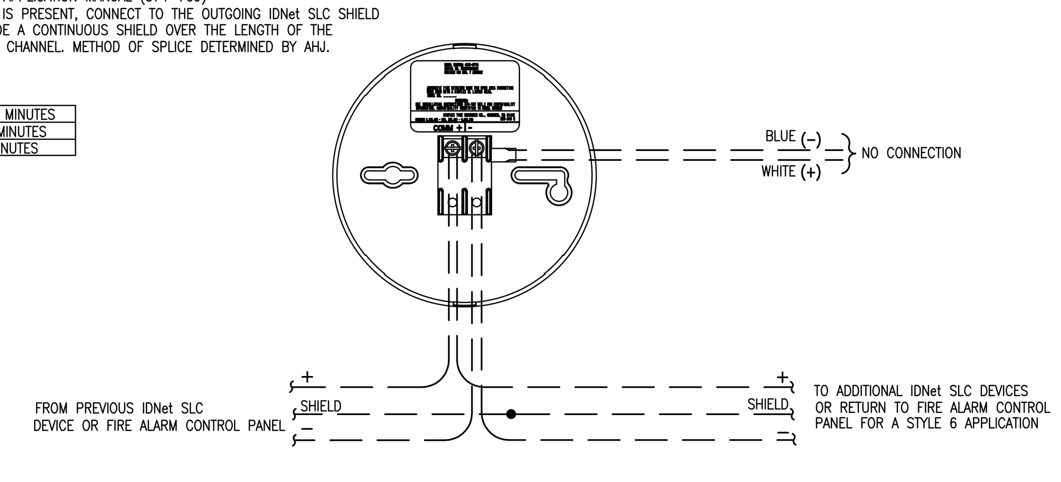

4090-9001 IDNET SLC, SUPERVISED ADDRESSABLE INPUT MODULE (AIM)

PRODUCT INFORMATION

FEATURES:
- UL LISTED
- ADDRESSABLE COMMUNICATIONS SUPPLY BOTH DATA AND POWER TO PROVIDE:
  - – SUPERVISED STYLE B MONITORING OF NORMALLY OPEN DRY CONTACTS.
  - – COMMUNICATIONS WIRING USING ONE TWISTED, SHIELDED WIRE PAIR.
- COMPATIBLE WITH SIMPLEX ADDRESSABLE FIRE ALARM CONTROL PANELS.
- COMPACT, SEALED CONSTRUCTION:
  - – ALLOWS MOUNTING IN A SINGLE GANG BOX
  - – REDUCES DUST INFILTRATION
- PROVIDES CURRENT LIMITED MONITORING
  - – TO MONITOR TAMPER SWITCH (SUPERVISORY) AND WATER FLOW SWITCH (ALARM) ON SAME CIRCUIT
  - – REQUIRES ONLY ONE ADDRESSABLE POINT
- SELECTABLE LATCHING OPERATION
  - – MONITORS MOMENTARY CONTACT CLOSURES SUCH AS RATE-OF RISE HEAT DETECTORS

SPECIFICATIONS:
- WIRE CONNECTIONS: SCREW TERMINALS FOR IN/OUT WIRING FOR WIRE FROM #18 TO #14 AWG.
- DIMENSIONS: 1 9/16" X 1 3/4" X 1 1/4"
- TEMPERATURE RANGE: 32° F TO 158° F (0° C TO 70° C)
- HUMIDITY: UP TO 93% RH AT 100° F
- SUPERVISION RESISTOR: 6.8kΩ 1/2W, (SUPPLIED) SIMPLEX PART NO. 733-886
- RESISTOR FOR CURRENT LIMITED OPERATION: 4.7kΩ 1/2W, WITH A 1.8kΩ 1/2W
- INPUT REQUIREMENTS: NORMALLY OPEN, DRY CONTACTS
- HOUSING MATERIAL: BLACK THERMOPLASTIC

DESCRIPTION:
THE 4090-9001 IS AN ADDRESSABLE INPUT MODULE (AIM) WITH POWER AND COMMUNICATIONS SUPPLIED BY A TWO WIRE ADDRESSABLE CIRCUIT. IT PROVIDES LOCATION SPECIFIC ADDRESSABILITY TO A SINGLE INITIATING DEVICE (SUCH AS SINGLE STATION SMOKE DETECTOR ALARM CONTACTS OR HEAT DETECTOR CONTACTS) OR MULTIPLE DEVICES AT THE SAME LOCATION BY MONITORING NORMALLY OPEN, DRY CONTACTS AND THE WIRING TO AN END-OF-LINE RESISTOR. CLOSURE OF THE MONITORED CONTACTS INITIATES AN ALARM OR OTHER RESPONSE AS PROGRAMMED AT THE FIRE ALARM CONTROL PANEL. AN OPEN IN THE MONITORED CIRCUIT WIRING WILL CAUSE A TROUBLE TO BE REPORTED. IF THE INITIATING DEVICE CONTACTS ARE MOMENTARY, SUCH AS FROM A RATE-OF-RISE HEAT DETECTOR, ENABLING THE LATCH FEATURE WILL MAINTAIN THE ALARM CONDITION UNTIL THE SYSTEM IS RESET. FOR APPLICATIONS WHERE THE CONTACT CLOSURE LATCHES, OR IF ITS CONDITION NEEDS TO BE TRACKED AT THE CONTROL PANEL NON-LATCHING OPERATION MAY BE ENABLED.

WIRING NOTES:
1. ALL WIRING TO COMPLY WITH LOCAL CODE.
2. CONDUCTORS MUST TEST FREE OF ALL GROUNDS.
3. ONLY N.O. DRY CONTACTS ARE ALLOWED.
4. MAXIMUM WIRE LENGTH (NO. 18 AWG) IS 400 FT. W/2081-9044 OVER VOLTAGE PROTECTORS OR 400 FT. W/O PROTECTORS.
5. A MAXIMUM QUANTITY OF DEVICES PER CIRCUIT: CONTROL PANEL MODULE DEPENDENT
6. IF SHIELD IS PRESENT, CONNECT TO THE OUTGOING IDNet SHIELD TO PROVIDE A CONTINUOUS SHIELD OVER THE LENGTH OF THE IDNet CHANNEL. METHOD OF SPLICE DETERMINED BY AHJ.
7. REFER TO INSTALLATION INSTRUCTIONS 574-331.
8. MAXIMUM ALLOWABLE LINE RUN FROM THE F.A.C.P. TO THE FARTHEST DEVICE, NOT TO EXCEED 2500 FEET.
9. MAXIMUM TOTAL WIRE (INCLUDING ALL T-TAPS) FROM THE FIRE ALARM CONTROL PANEL
10. FOR STYLE 6 CIRCUIT WIRING IT IS RECOMMENDED THAT THE PRIMARY ① AND THE BACK-UP ② LINES BE IN SEPARATE WIRE RUNS AND IN COMPLIANCE WITH LOCAL REQUIREMENTS.
11. REFER TO FIELD WIRING DIAGRAM 842-073

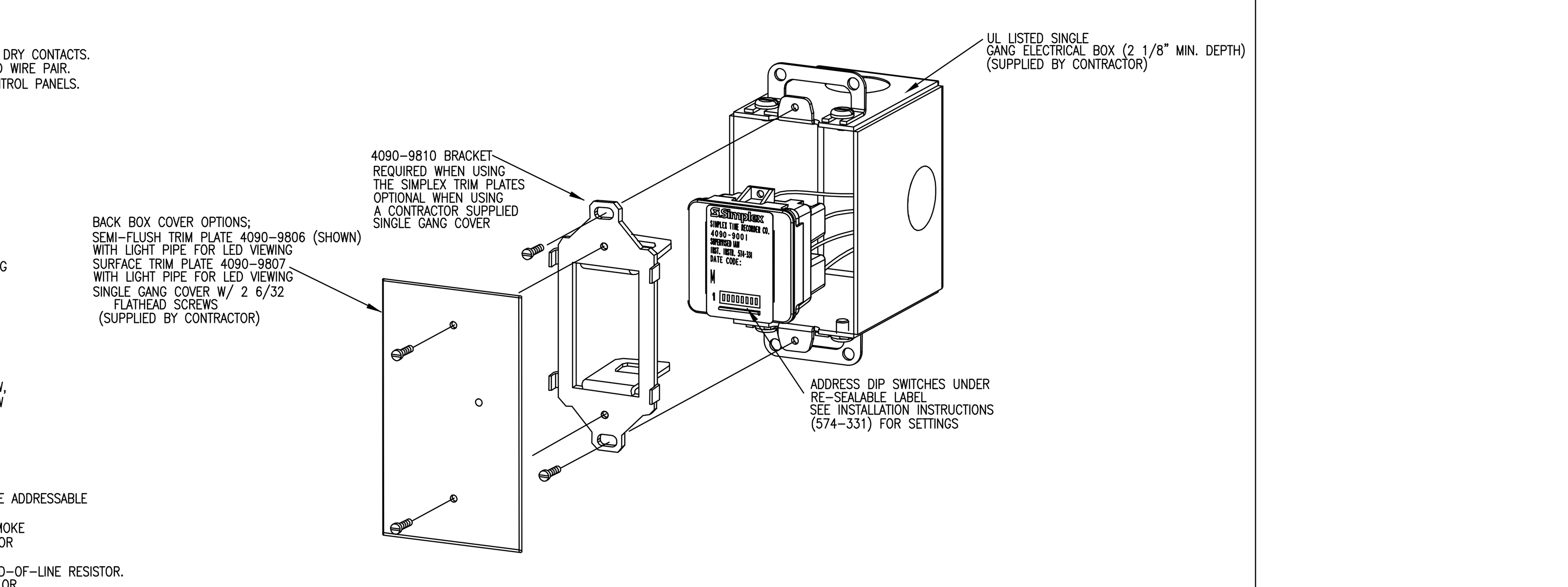

T-SENSING OPERATION:
- SUPERVISED INPUT:
  - – 4090-9001 AIM WITH T-SENSE CAPABILITY HAS A SUPERVISED INPUT THAT MONITORS FOR CONTINUITY TO AN END-OF-LINE RESISTOR AND CAN DIFFERENTIATE BETWEEN A SHORT CIRCUIT CONTACT CLOSURE AND A CURRENT LIMITED CONTACT CLOSURE.
- FOUR STATE OPERATION:
  - – NORMAL IS WHEN ALL CONTACTS ARE OPEN AND THERE IS CONTINUITY TO THE END-OF-LINE RESISTOR.
  - – OPEN IS WHEN CONTINUITY DOES NOT EXIST TO THE END-OF-LINE RESISTOR, CAUSING A TROUBLE CONDITION.
  - – SHORT, INDICATES THAT A CONTACT HAS CLOSED THAT IS DIRECTLY CONNECTED TO THE INPUT CIRCUIT.
  - – CURRENT LIMITED INDICATES THAT A CONTACT HAS CLOSED BEYOND A SERIES CONNECTED CURRENT LIMITING RESISTOR. THIS OPERATION ALLOWS DIFFERENTIATION BETWEEN TWO DIFFERENT CONTACT TYPES DUE TO THEIR WIRING LOCATION, AND REPORTING AS A SINGLE IDNET ADDRESSABLE POINT TO A 4100U FIRE ALARM CONTROL PANEL.

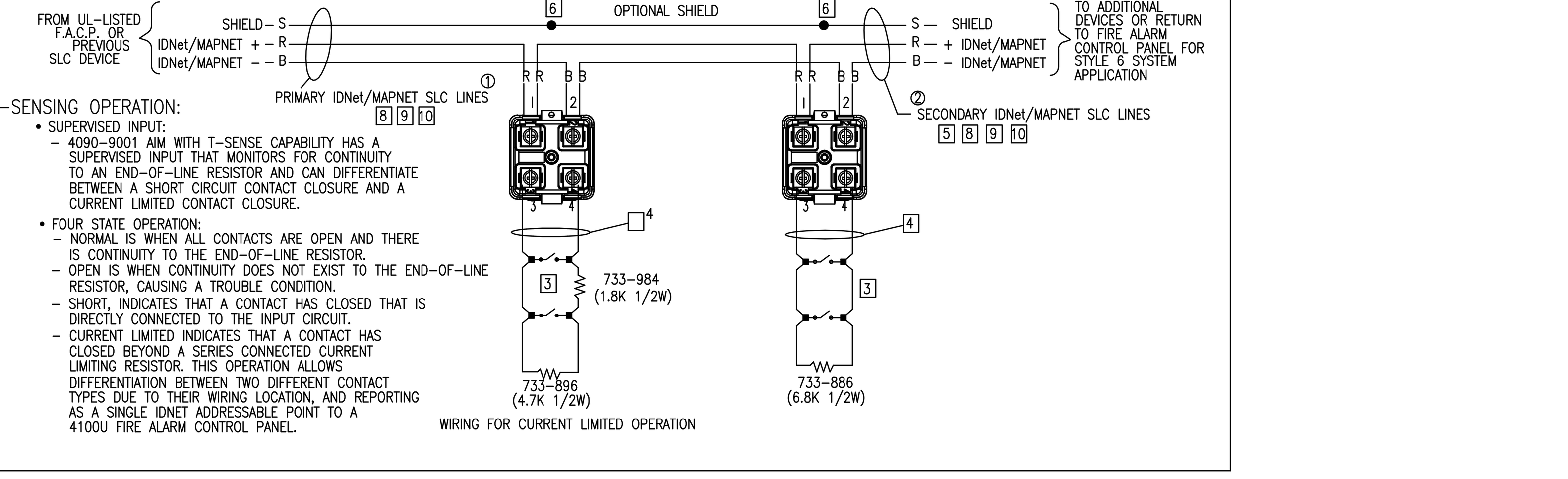

tyco SimplexGrinnell
Safer. Smarter. Tyco.™
DISTRICT - 147
30 THOMAS DRIVE
WESTBROOK, ME 04092
SERVICE: 207-842-6440
PHONE: 207-842-6440
FAX: 207-842-6439

667 CONGRESS STREET APARTMENTS

667 CONGRESS STREET APARTMENTS
667 CONGRESS STREET
PORTLAND, ME 04101

Revisions shown with ⚠ symbol

ISSUE LOG:

MARK	DATE	CAD	CHK	DESCRIPTION

DRAWN BY:	DINESH KUMAR
CHECKED BY:	M VAUGHN
ISSUE DATE:	5/4/16
JOB #:	147426142
PROJECT #:	147:991816001

SIMPLEXGRINNELL © 2016

SYSTEM: FIRE ALARM SYSTEM

SHEET: WIRING TYPICALS

FA-701

IMPORTANT NOTICE TO USER: By accepting or using this drawing and/or the information contained herein, the user agrees to the following terms and conditions: The electronic information in the drawing may be subject to intentional or unintentional alteration. Any use, reuse, copying modification or alteration of the information contained herein shall be at the sole risk of the user. This information may not be sold or transferred to any third party, used on other projects or additions to the project for which it was prepared, or used for completion of this project by any third party. SimplexGrinnell disclaims all liability for the use or reuse of altered files by the user or any third party and such use will be a user's sole risk. User shall, to the fullest extent permitted by law, defend, indemnify, and hold SimplexGrinnell harmless from any and all claims for loss, damage or injury arising directly or indirectly therefrom.

FILE PATH: Z:\CAD~Engineering - New (2011 & Newer)\Maine Projects\667 Congress - Apartments (P# 991816001)\SG Dwgs\Original Dwgs & Calcs\Original Fire Alarm Drawings\FA-701.dwg
LAST SAVED BY: DKTIRUPATHI
LAST PRINTED: 5/18/2016 4:42:25 PM
30" x 42" - Arch E1 Size