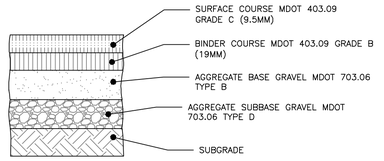

NOTES:

1. COMPACT SUBGRADE TO 95% MAXIMUM DRY DENSITY IN ACCORDANCE WITH ASTM D-1557
2. LOCAL BITUMINOUS PAVEMENT PROFILE APPLIES TO LOCATIONS INCLUDED WITHIN AVON STREET AND VERNON PLACE R.O.W.

THICKNESS OF LAYERS	
STANDARD	LAYERS
1-1/2"	SURFACE COURSE MDOT 403.09 GRADE C (9.5mm)
2"	BINDER COURSE MDOT 403.09 GRADE B (19mm)
3"	AGGREGATE BASE GRAVEL MDOT 703.06 TYPE B
15"	AGGREGATE SUBBASE GRAVEL MDOT 703.06 TYPE D

LOCAL BITUMINOUS PAVEMENT PROFILE

NOT TO SCALE

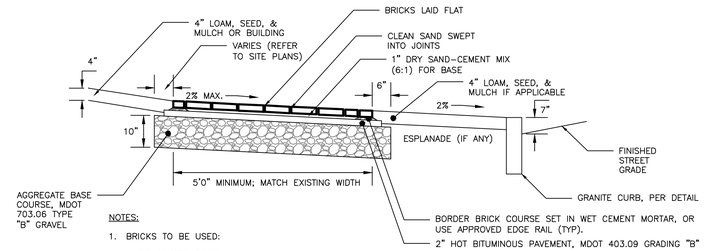

NOTES:

1. BRICKS TO BE USED:

   NEW CONSTRUCTION:
   4"X8" PINE HALL PATHWAY PAVER BRICK; MFG. BY PINE HALL BRICK CO., MADISON, NORTH CAROLINA. LACHANCE ITEM #193623;. PINE HALL PATHWAY PAVER BRICK.

2. INSTALL BRICK FLUSH UP TO BUILDING, PAVEMENT, STAIRS, CONCRETE SURFACES, CURB OR LANDSCAPED AREAS.

BRICK SIDEWALK WITH BITUMINOUS BASE DETAIL

NOT TO SCALE

NOTES:

1. COMPOSITE WET SET (REPLACEABLE) DETECTABLE WARNING PANELS SHALL BE AS MANUFACTURED BY ADA SOLUTIONS, INC. (WWW.ADATILE.COM) OR APPROVED EQUAL.
2. CAST IN PLACE CONCRETE SHALL MEET SPECIFICATIONS FOR MAINE D.O.T. CLASS A STRUCTURAL CONCRETE, MINIMUM COMPRESSIVE STRENGTH 4,000 PSI. THE CONCRETE SHALL BE SEALED PRIOR TO SETTING PANELS. THE EXPOSED CONCRETE BORDER SHALL RECEIVE A GROOVED EDGE BETWEEN THE PANEL AND CONCRETE, ALONG WITH A UNIFORM BROOM FINISH PERPENDICULAR TO THE FLOW OF PEDESTRIAN TRAFFIC.
3. TRUNCATED DOMES SHALL BE ALIGNED IN ROWS, PARALLEL AND PERPENDICULAR TO THE PREDOMINANT DIRECTION OF TRAVEL. TRUNCATED DOME BRICKS AND GRANITE PAVERS ARE NOT ALLOWED.
4. FOR ALL DETECTABLE WARNING PANELS (EXCEPT AS SPECIFIED IN TECHNICAL MANUAL 1.8.4.), FEDERAL DARK GRAY COLORED (#36118) PANEL(S) SHALL BE USED. FOLLOW MANUFACTURER'S INSTRUCTIONS FOR INSTALLATION.
5. SIZE: THE DETECTABLE WARNING PANEL(S) SHALL EXTEND 24 INCHES MINIMUM IN THE DIRECTION OF TRAVEL AND THE FULL WIDTH OF THE CURB RAMP, LANDING, OR BLENDED TRANSITION TO THE STREET.
6. ORIENTATION: THE DETECTABLE WARNING PANEL SHALL BE LOCATED SO THAT THE EDGE NEAREST TO THE CURB LINE IS 6 INCHES MINIMUM AND 8 INCHES MAXIMUM FROM THE CURB LINE. THE PANEL SHALL BE ORIENTED TO THE DIRECTION OF TRAVEL AS IDENTIFIED BY THE POINT OF EGRESS.

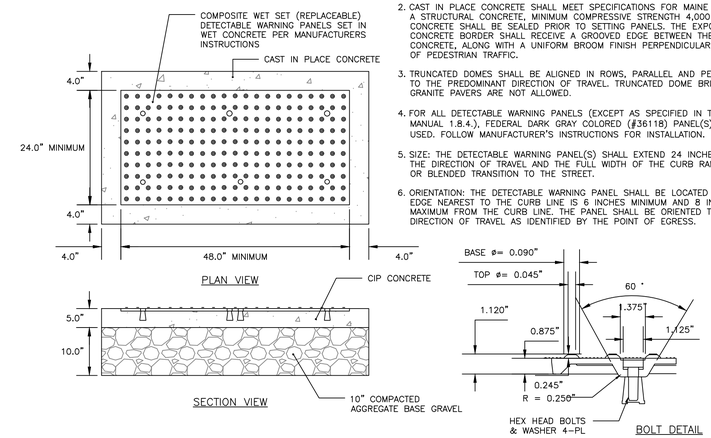

SIDEWALK RAMP DETECTABLE WARNING PANEL

NOT TO SCALE

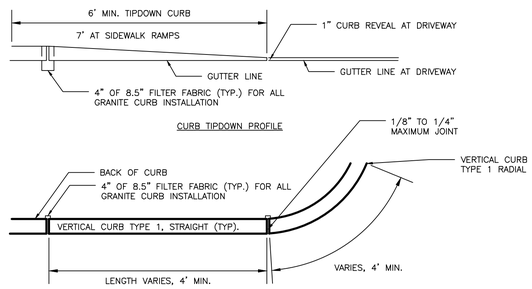

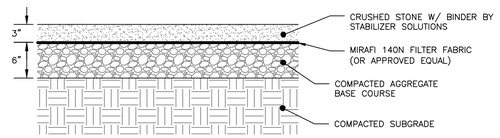

CRUSHED STONE PAVING

NOT TO SCALE

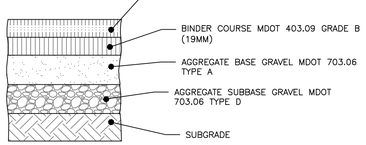

NOTES:

1. COMPACT SUBGRADE TO 95% MAXIMUM DRY DENSITY IN ACCORDANCE WITH ASTM D-1557.
2. ARTERIAL BITUMINOUS PAVEMENT PROFILE APPLIES ONLY WITHIN CONGRESS STREET R.O.W.

THICKNESS OF LAYERS	
STANDARD	LAYERS
2"	SURFACE COURSE MDOT 403.09 GRADE C (12.5mm)
3"	BINDER COURSE MDOT 403.09 GRADE B (19mm)
6"	AGGREGATE BASE GRAVEL MDOT 703.06 TYPE B
18"	AGGREGATE SUBBASE GRAVEL MDOT 703.06 TYPE D

CITY OF PORTLAND ARTERIAL BITUMINOUS PAVEMENT PROFILE

NOT TO SCALE

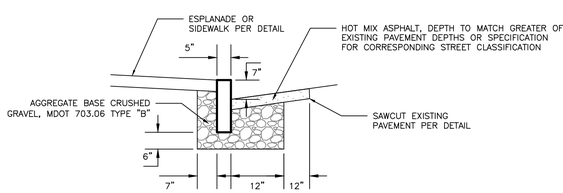

VERTICAL GRANITE CURB AND TIPDOWN INSTALLATION

NOT TO SCALE

NOTES:

1. ALL RAMPS SHALL COMPLY WITH ADA STANDARDS
2. LANDING AREA MAY BE REQUIRED BASED ON SIDEWALK DIMENSIONS
3. SIDEWALK MATERIAL SHALL BE PER CITY OF PORTLAND SIDEWALK MATERIAL POLICY
4. FLARED SECTIONS SHOULD MATCH SURFACE MATERIAL USED FOR SIDEWALK CONSTRUCTION
5. 7' FLARE MINIMUM

DESIGN ELEMENT	SLOPE IN DIRECTION OF TRAVEL	CROSS SLOPE
APPROACH	8.33% MAXIMUM	2%
LANDING	2%	2%
RAMP	8.33% MAXIMUM	MATCH STREET GRADE
FLARE	10% MAXIMUM AT CURB FACE	–
SIDEWALK	MATCH STREET GRADE	2%

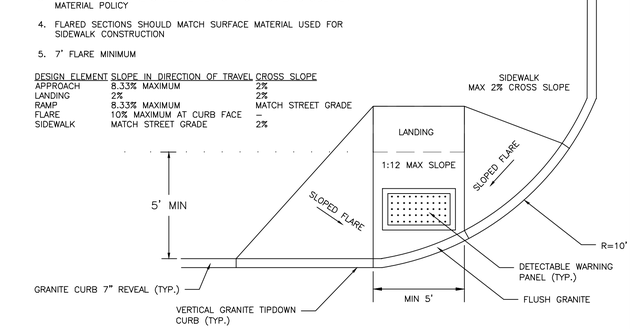

SIDEWALK RAMP

NOT TO SCALE

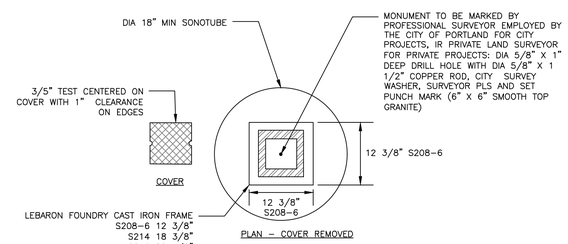

NOTES:

1. SAWCUT EXISTING PAVEMENT AND REMOVE 2' STRIP OF EXISTING PAVEMENT. APPLY BITUMINOUS TACK COAT PRIOR TO PLACEMENT OF NEW BITUMINOUS PAVEMENT.
2. THE NEW PAVEMENT SECTION SHALL MEET THE CITY OF PORTLAND ARTERIAL BITUMINOUS PAVEMENT SECTION DETAIL AT A MINIMUM OR THE THE EXISTING PAVEMENT AND AGGREGATE BASE AND SUBBASE DEPTH WHICHEVER IS GREATER.

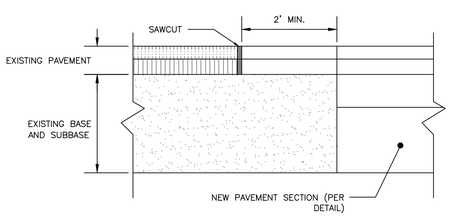

PAVEMENT SAWCUT DETAIL

NOT TO SCALE

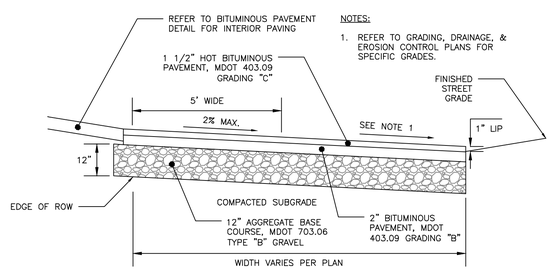

NOTES:

1. REFER TO GRADING, DRAINAGE, & EROSION CONTROL PLANS FOR SPECIFIC GRADES.

BITUMINOUS DRIVEWAY APRON DETAIL

NOT TO SCALE

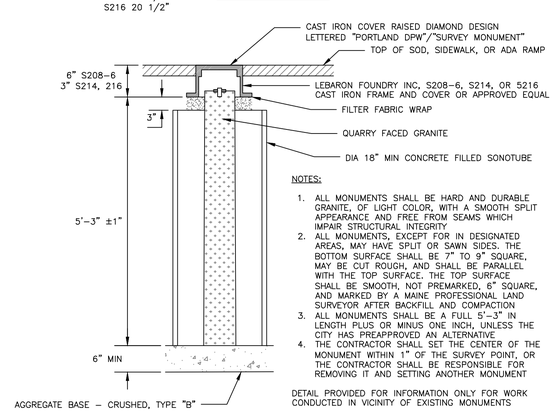

NOTES:

1. ALL MONUMENTS SHALL BE HARD AND DURABLE GRANITE, OF LIGHT COLOR, WITH A SMOOTH SPLIT APPEARANCE AND FREE FROM SEAMS WHICH IMPAIR STRUCTURAL INTEGRITY
2. ALL MONUMENTS, EXCEPT FOR IN DESIGNATED AREAS, MAY HAVE SPLIT OR SAWN SIDES. THE BOTTOM SURFACE SHALL BE 7" TO 9" SQUARE, MAY BE CUT ROUGH, AND SHALL BE PARALLEL WITH THE TOP SURFACE. THE TOP SURFACE SHALL BE SMOOTH, NOT PREMARKED, 6" SQUARE, AND MARKED BY A MAINE PROFESSIONAL LAND SURVEYOR AFTER BACKFILL AND COMPACTION
3. ALL MONUMENTS SHALL BE A FULL 5'-3" IN LENGTH PLUS OR MINUS ONE INCH, UNLESS THE CITY HAS PREAPPROVED AN ALTERNATIVE
4. THE CONTRACTOR SHALL SET THE CENTER OF THE MONUMENT WITHIN 1" OF THE SURVEY POINT, OR THE CONTRACTOR SHALL BE RESPONSIBLE FOR REMOVING IT AND SETTING ANOTHER MONUMENT

DETAIL PROVIDED FOR INFORMATION ONLY FOR WORK CONDUCTED IN VICINITY OF EXISTING MONUMENTS

GRANITE STREET MONUMENT

NOT TO SCALE

NOTES:

1. REFER TO GRADING, DRAINAGE AND EROSION CONTROL PLANS FOR SITE GRADING
2. REFER TO BITUMINOUS DRIVEWAY APRON DETAIL FOR APRON CROSS-SECTION

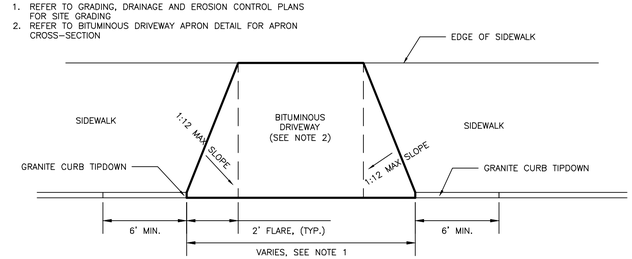

DRIVEWAY APRON LAYOUT DETAIL

NOT TO SCALE

ISSUED FOR CONSTRUCTION

ISSUED FOR	BY / DATE
PRELIM. APPLICATION	WHS 7/30/15
PC DD SET	WHS 8/7/15
PC PROGRESS SET	WHS 8/21/15
COMMENT/RESPONSE	WHS 9/15/15
FINAL SUBMISSION	WHS 10/13/15
BIDDING	WHS 10/19/15
COA	WHS 10/30/15
FOR CONSTRUCTION	WHS 11/2/15
CITY APPROVED PLAN	WHS 12/9/15
REVISION	REV. / DATE

DRAWING NAME: SITE DETAILS 1

PROJECT NAME: 667 CONGRESS STREET REDEVELOPMENT

CLIENT: REDFERN LONGFELLOW, LLC.
P.O. BOX 8816 PORTLAND, ME 04104

ACORN ENGINEERING, INC.

THIS PLAN SHALL NOT BE MODIFIED WITHOUT WRITTEN PERMISSION FROM ACORN ENGINEERING, INC. ANY MODIFICATION, EITHER BY ADDITION OR OTHERWISE, SHALL BE AT THE USER'S SOLE RISK AND WITHOUT LIABILITY TO ACORN ENGINEERING, INC.

ACORN ENGINEERING, INC.
158 DANFORTH STREET, PORTLAND MAINE 04102
(207) 775-2635

FILE:	1060_DETAILS
DATE:	4/20/2015
JN:	1060
SCALE:	NTS
DESIGNED BY:	WHS
DRAWN BY:	MAG
CHECKED BY:	WHS

STATE OF MAINE WILLIAM H. SAVAGE No. 11415 12-4-15 PROFESSIONAL ENGINEER

DRAWING NO.
C-40