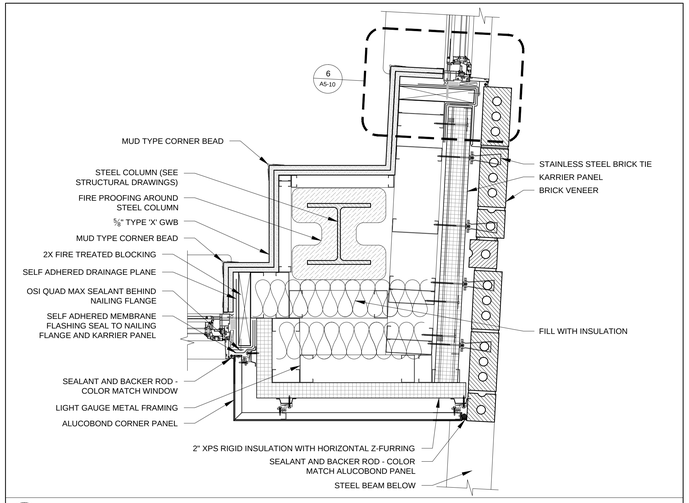

8 PLAN DETAIL AT BRICK AND ALUCOBOND CORNER
1 1/2" = 1'-0"

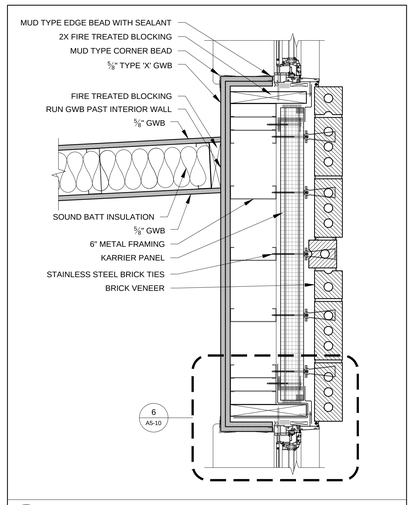

7 PLAN DETAIL AT INTERIOR WALL
1 1/2" = 1'-0"

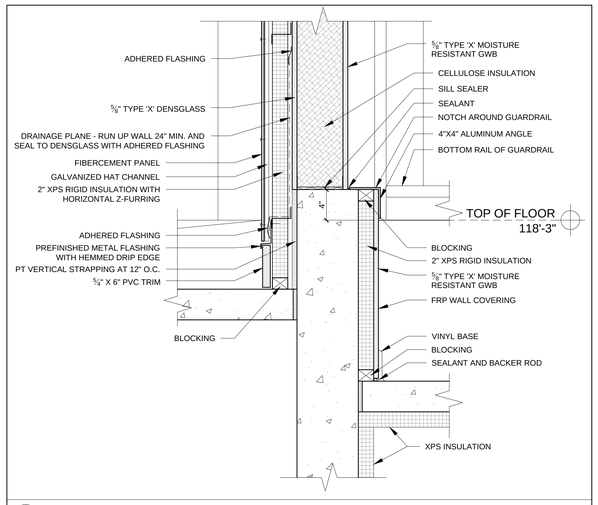

4 SECTION DETAIL AT TRASH ROOM WALL
1 1/2" = 1'-0"

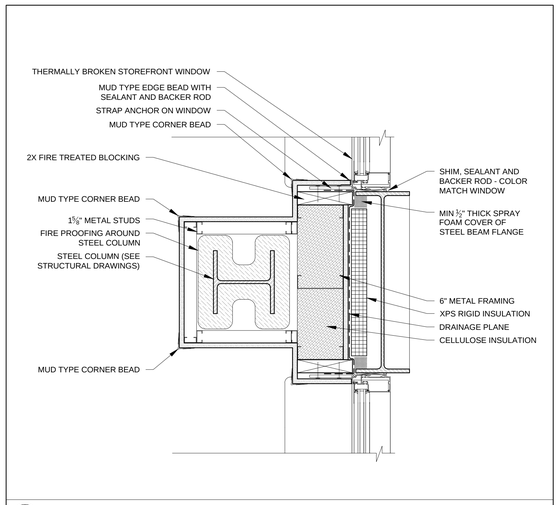

3 PLAN DETAIL AT STEEL COLUMN AT JOE'S (SOUTH WALL)
1 1/2" = 1'-0"

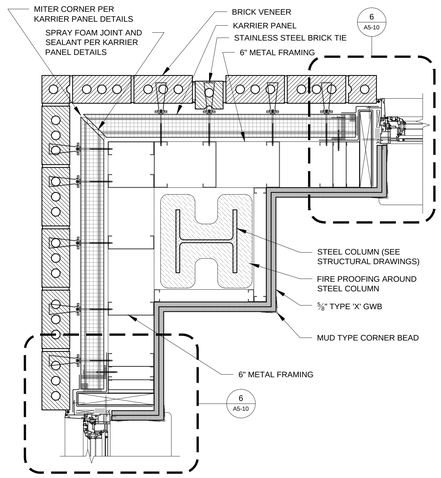

10 PLAN DETAIL AT EXTERIOR BRICK CORNER
1 1/2" = 1'-0"

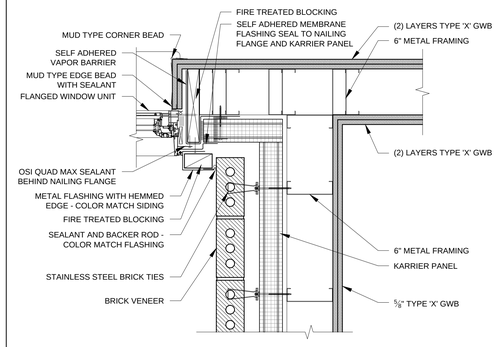

6 PLAN DETAIL AT EXTERIOR CORNER AT TRANSITION FROM BRICK TO METAL SIDING
1 1/2" = 1'-0"

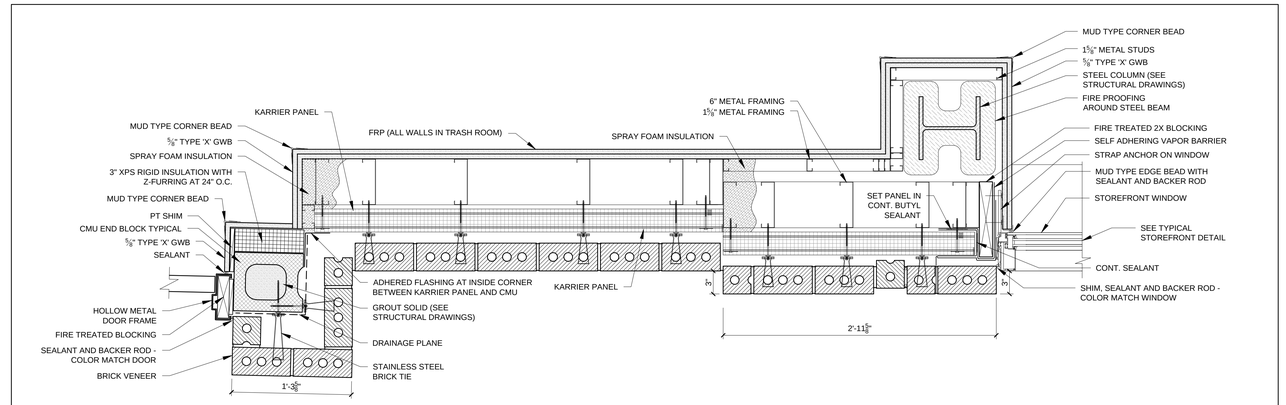

2 PLAN DETAIL AT TRASH ROOM ENTRY
1 1/2" = 1'-0"

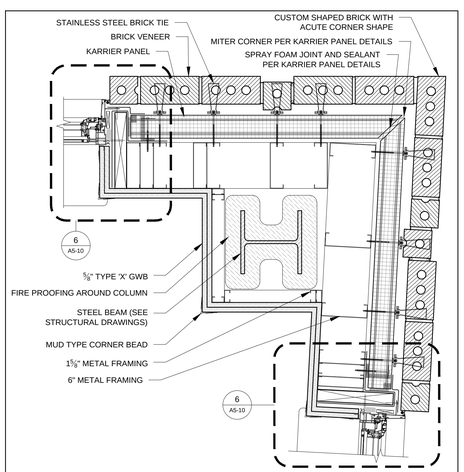

9 PLAN DETAIL AT EXTERIOR BRICK CORNER
1 1/2" = 1'-0"

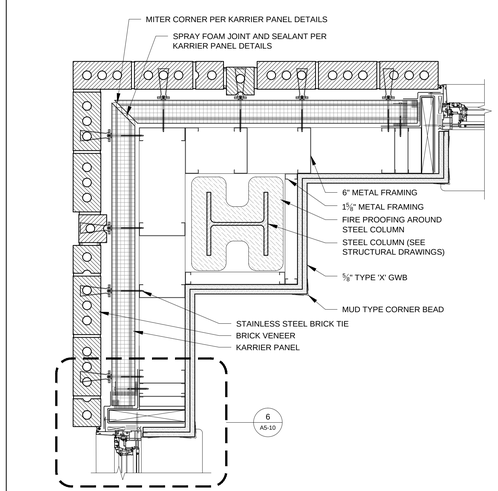

5 PLAN DETAIL AT EXTERIOR BRICK CORNER
1 1/2" = 1'-0"

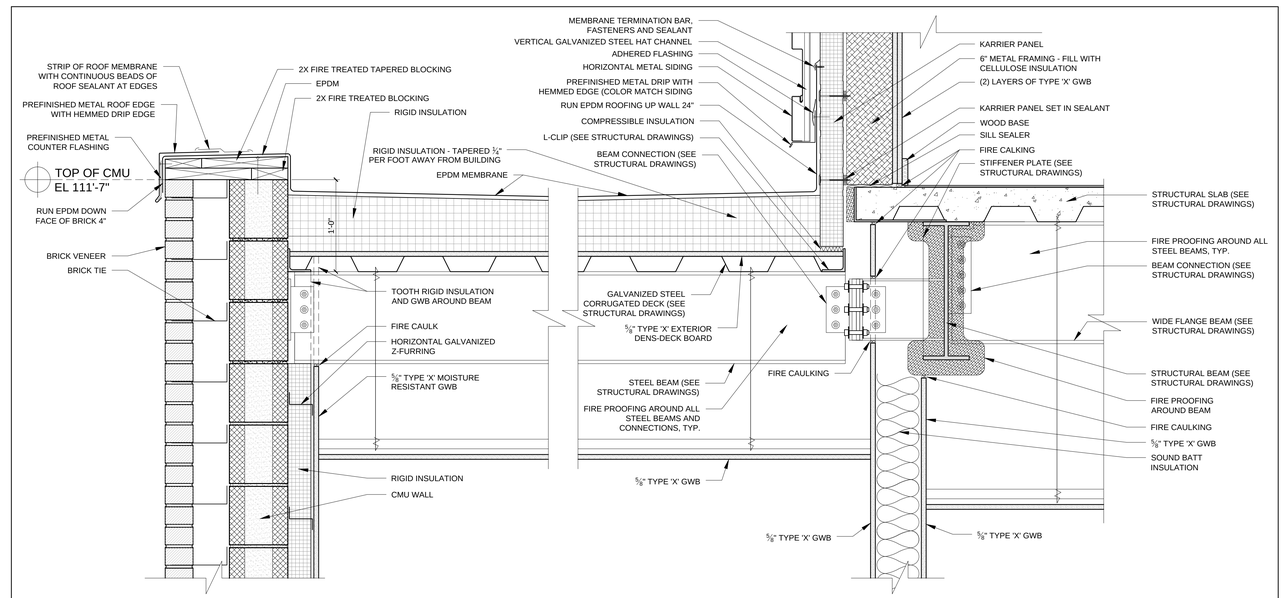

1 SECTION DETAIL AT ROOF OVER TRASH ROOM
1 1/2" = 1'-0"

REGISTERED ARCHITECT
RYAN J. SENATORE
No. 3322
STATE OF MAINE

© 2015 RYAN SENATORE ARCHITECTURE

667 CONGRESS STREET
APARTMENTS
PORTLAND, MAINE

RSA
RYAN SENATORE ARCHITECTURE
565 CONGRESS STREET
PORTLAND, MAINE 04101
207-650-6414
senatorearchitecture.com

CONSULTANTS:

STRUCTURAL:
Structural Integrity
77 Oak Street
Portland, ME 04101
207-774-4614

REVISIONS:

DATE:	2 NOVEMBER 2015
PROJECT No.	1503
DRAWN BY:	RJS / RRT
CHECKED BY:	RJS
SCALE:	AS NOTED

SHEET TITLE:
DETAILS

A5-19