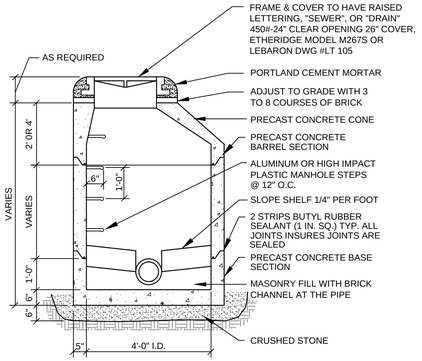

NOTE: PIPE CONNECTIONS SHALL BE WATERTIGHT FLEXIBLE BOOT CONNECTORS PROVIDES LEAKPROOF CONNECTION

PRECAST CONCRETE MANHOLE

NOT TO SCALE

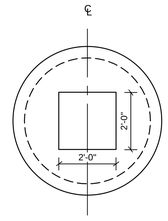

PLAN VIEW

WHERE DEPTH OF COVER IS NOT SUFFICIENT TO USE CONCENTRIC OR TRUNCATED CONE, A FLAT TOP MAY BE USED.

NOTE:
WHERE THE CATCH BASIN IS INSTALLED ADJACENT TO BITUMINOUS CANCRETE OF TYPE V SLOPED CURB. SET CENTERLINE OF CATCH BASIN FRAME 1'-6" OFF FACE OF CURB.

EXTERIOR OF STRUCTURE SHALL BE TREATED WITH 2 COATS OF APPROVED DAMP PROOF MATERIAL.

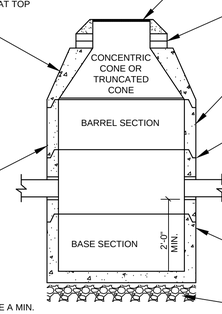

FRAME AND GRATE - NEENAH R-3405-B OR EQUAL WITH MAXIMUM OPENING SIZE OF 2 1/4".

CEMENT MORTAR (TYPE II CEMENT) BRING TO GRADE WITH BRICK WITH A MIN. OF 1 COURSE AND A MAX. OF 3 COURSES.

SIDEWALL OF CATCH BASIN TO BE BACKFILLED WITH SELECT BACKFILL, AASHTO M145-49 AS REVISED, CLASS A-3 OR BETTER.

FOR JOINTS OF WATERTIGHT CATCH BASIN, KENT SEAL, RAM NEK, OR O-RING MUST MEET AASHTO M1988.

ALL PIPES TO HAVE A WATERTIGHT SEAL FLEXIBLE SLEEVE CAST IN PRECAST STRUCTURE TO BE INTERFACE LOCK JOINT OR EQUAL.

PRECAST CONCRETE BASE SECTION WITH PIPE OPENINGS AS APPROVED BY THE ENGINEER.

12" THICK 3/4" CRUSHED STONE BASE

SECTION VIEW

DESIGN NOTES:

1. ALL CONCRETE TO HAVE A MIN. OF 4,000 PSI COMPRESSIVE STRENGTH AT 28 DAYS.
2. DESIGN LOAD FOR H-20 WHEEL LOAD.
3. CATCH BASIN TO CONFORM TO ASTM-C478 SPECIFICATIONS.
4. REINFORCE TO 0.12 IN SQ./LF..

NOTE:
CASCADE GRATES SHALL BE INSTALLED ON GRADIENT OF GUTTER IF PROFILE GRADE EXCEEDS 5% GRATES SHALL BE DEPRESSED 2" BELOW NORMAL GUTTER GRADE UNLESS THIS DEPRESSION ITERFERES WITH TRAFFIC. PARALLEL BAR GRATES SHALL BE INSTALLED ON A LEVEL GRADIENT.

TYPICAL CATCH BASIN

NOT TO SCALE

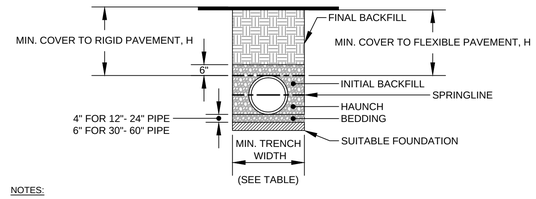

NOTES:

1. ALL PIPE SYSTEMS SHALL BE INSTALLED IN ACCORDANCE WITH ASTM D2321, "STANDARD PRACTICE FOR UNDERGROUND INSTALLATION OF THERMOPLASTIC PIPE FOR SEWERS AND OTHER GRAVITY FLOW APPLICATIONS", LATEST ADDITION

2. MEASURES SHOULD BE TAKEN TO PREVENT MIGRATION OF NATIVE FINES INTO BACKFILL MATERIAL, WHEN REQUIRED.

3. FOUNDATION: WHERE THE TRENCH BOTTOM IS UNSTABLE, THE CONTRACTOR SHALL EXCAVATE TO A DEPTH REQUIRED BY THE ENGINEER AND REPLACE WITH SUITABLE MATERIAL AS SPECIFIED BY THE ENGINEER. AS AN ALTERNATIVE AND AT THE DISCRETION OF THE DESIGN ENGINEER, THE TRENCH BOTTOM MAY BE STABILIZED USING A GEOTEXTILE MATERIAL.

4. BEDDING: SUITABLE MATERIAL SHALL BE CLASS I, II OR III. THE CONTRACTOR SHALL PROVIDE DOCUMENTATION FOR MATERIAL SPECIFICATION TO ENGINEER. UNLESS OTHERWISE NOTED BY THE ENGINEER, MINIMUM BEDDING THICKNESS SHALL BE 4" (100mm) FOR 4"-24" (100mm-600mm); 6" (150mm) FOR 30"-60" (750mm-900mm).

5. INITIAL BACKFILL: SUITABLE MATERIAL SHALL BE CLASS I, II OR III IN THE PIPE ZONE EXTENDING NOT LESS THAN 6" ABOVE CROWN OF PIPE. THE CONTRACTOR SHALL PROVIDE DOCUMENTATION FOR MATERIAL SPECIFICATION TO ENGINEER. MATERIAL SHALL BE INSTALLED AS REQUIRED IN ASTM D2321, LATEST EDITION.

6. MINIMUM COVER: MINIMUM COVER, H, IN NON-TRAFFIC APPLICATIONS (GRASS OR LANDSCAPE AREAS) IS 12" FROM THE TOP OF PIPE TO GROUND SURFACE. ADDITIONAL COVER MAY BE REQUIRED TO PREVENT FLOATION. FOR TRAFFIC APPLICATIONS, MINIMUM COVER, H, IS 12" UP TO 48" DIAMETER PIPE AND 24" OF COVER FOR 54"-60" DIAMETER PIPE, MEASURED FROM TOP OF PIPE TO BOTTOM OF FLEXIBLE PAVEMENT OR TO TOP OF RIGID PAVEMENT.

RECOMMENDED MINIMUM TRENCH WIDTHS

PIPE DIAM.	MIN. TRENCH WIDTH
4"	21"
6"	23"
8"	26"
10"	28"
12"	30"
15"	34"
18"	39"
24"	48"
30"	56"
36"	64"
42"	72"
48"	80"
54"	88"
60"	96"

MINIMUM RECOMMENDED COVER BASED ON VECHICLE LOADING CONDITIONS

	SURFACE LIVE LOADING CONDITION	
PIPE DIAM.	H-25	HEAVY CONSTRUCTION (75T AXLE LOAD) *
12" - 48"	12"	48"
54" - 60"	24"	60"

* VEHICLES IN EXCESS OF 75T MAY REQUIRE ADDITIONAL COVER

7. INSULATION: RIGID INSULATION SHALL BE PROVIDED FOR PIPES WITH LESS THAN 4' OF COVER IN ACCORDANCE WITH THE FOLLOWING TABLE:

COVER OVER PIPE	INSULATION THICKNESS
12" - 24"	3"
24" - 36"	2"
36" - 48"	1"
48"+	NONE

TYPICAL TRENCH DETAIL

NOT TO SCALE

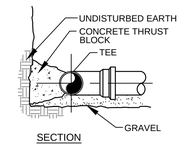

SECTION

CONCRETE THRUST BLOCK SIZE REQUIREMENTS				
		SQ. FT. OF BEARING ON UNDISTURBED SOIL		
FITTINGS		90° BENDS	45° BENDS	TEES AND PLUGS
PIPE SIZE	6"	4.0	2.0	3.0
	8"	8.0	4.0	6.0
	12"	15	10	10

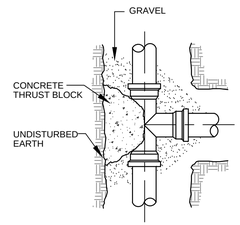

PLAN

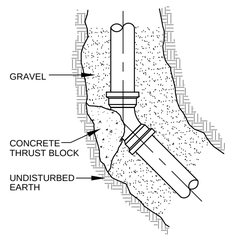

45° BEND

TEE & BEND DETAIL

NOT TO SCALE

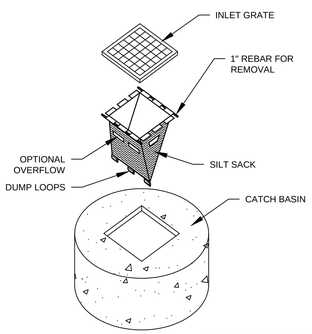

NOTES:
1. SILT SACKS TO BE INSTALLED IN ALL CATCH BASINS RECEIVING RUNOFF FROM DISTURBED AREA
2. SILT SACK TO BE MAINTAINED UNTIL TRIBUTARY ARE IS FULLY STABILIZED

SILT SACK DETAIL

NOT TO SCALE

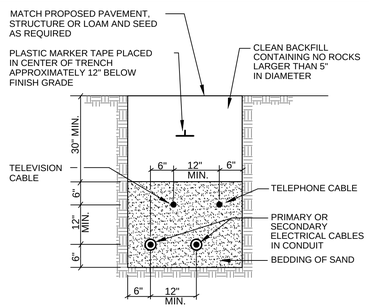

CABLES TO BE ENCASED IN SCHEDULE 40 PVC CONDUIT WHEN RUN BENEATH PAVED AREAS.

TYPICAL UNDERGROUND CABLE INSTALLATION

NOT TO SCALE

SECTION A - A

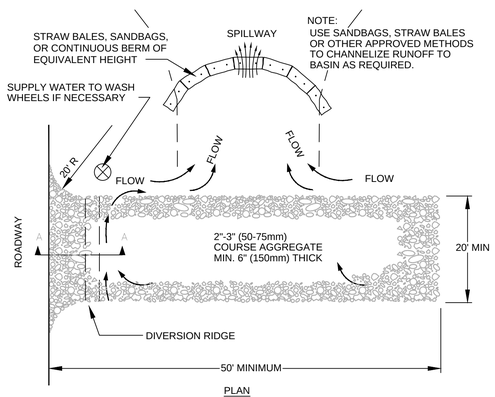

PLAN

NOTES:
1. THE ENTRANCE SHALL BE MAINTAINED IN A CONDITION THAT WILL PREVENT TRACKING OR FLOWING OF SEDIMENT ONTO PUBLIC RIGHT-OF-WAYS. THIS MAY REQUIRE TOP DRESSING, REPAIR AND/OR CLEAN OUT OF ANY MEASURES USED TO TRAP SEDIMENT.

2. WHEN NECESSARY, WHEELS SHALL BE CLEANED PRIOR TO ENTRANCE ONTO PUBLIC RIGHT-OF-WAY.

3. WHEN WASHING IS REQUIRED, IT SHALL BE DONE ON AN AREA STABILIZED WITH CRUSHED STONE THAT DRAINS INTO AN APPROVED SEDIMENT TRAP OR SEDIMENT BASIN.

STABILIZED CONSTRUCTION ENTRANCE

NOT TO SCALE

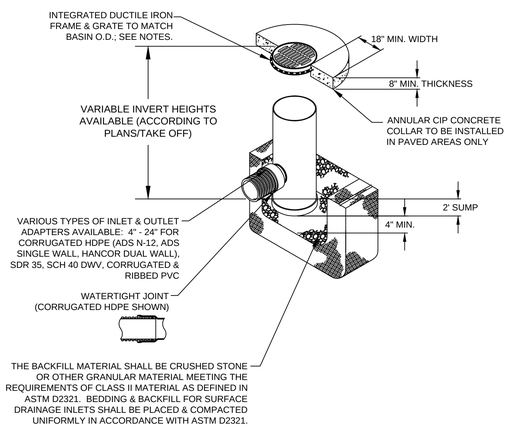

NOTES:
1. GRATES/SOLID COVER SHALL BE DUCTILE IRON PER ASTM A536 GRADE 70-50-05,
2. FRAMES SHALL BE DUCTILE IRON PER ASTM A536 GRADE 70-50-05
3. DRAINAGE CONNECTION STUB JOINT TIGHTNESS SHALL CONFORM TO ASTM D3212 FOR CORRUGATED HDPE (ADS & HANCOR DUAL WALL) & SDR 35 PVC
4. ALL CATCH BASINS SHALL HAVE STANDARD H-20 GRATES
5. ALL DRAIN MANHOLES SHALL HAVE SOLID COVER

NYLOPLAST DRAIN BASIN

NOT TO SCALE

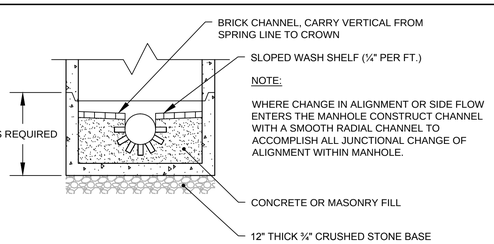

NOTE:

WHERE CHANGE IN ALIGNMENT OR SIDE FLOW ENTERS THE MANHOLE CONSTRUCT CHANNEL WITH A SMOOTH RADIAL CHANNEL TO ACCOMPLISH ALL JUNCTIONAL CHANGE OF ALIGNMENT WITHIN MANHOLE.

MANHOLE CHANNEL INVERT INSTALLATION

NOT TO SCALE

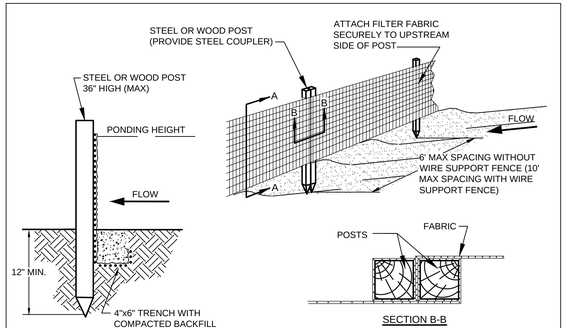

SECTION A-A

SECTION B-B

SILT FENCE

NOT TO SCALE

PRELIMINARY - NOT FOR CONSTRUCTION

STATE OF MAINE
MICHAEL E. TADEMA-WIELANDT
No. 7172
LICENSED
PROFESSIONAL ENGINEER

P.E.: MICHAEL E. TADEMA-WIELANDT
DATE: 8/29/17

NO.	DATE	REVISIONS	APP'D BY
3	8-29-2017	REMOVED SIDEWALK ON ABUTTING CITY PARCEL	MTW
2	8-7-2017	REVISED PER STAFF & PEER REVIEW COMMENTS	MTW
1	4-25-2017	SUBMITTED TO CITY OF PORTLAND FOR REVIEW	MTW

TERRADYN CONSULTANTS, LLC
Civil Engineering - Land Planning - Stormwater Design - Environmental Permitting
P.O. BOX 339
141 PLYMOUTH LANE
NEW GLOUCESTER, ME 04260
565 CONGRESS STREET
SUITE 310
PORTLAND, ME 04102
OFFICE: (207) 926-5111 FAX: (207) 221-1317
www.terradynconsultants.com

SHEET DESCRIPTION
ONEJOY PLACE
UTILITY & DRAINAGE DETAILS
1 JOY PLACE, PORTLAND, MAINE 04102

PREPARED FOR
ONEJOY PLACE, LLC
C/O RENEWAL HOUSING ASSOCIATES, LLC
2 UNION STREET, 5TH FLOOR
PORTLAND, MAINE 04101

DATE:	3/7/2017
SCALE:	N.T.S.
DESIGNED:	MTW
JOB NO:	1704
FILE: 1704-DETAILS.DWG	

SHEET C-6.1