MERCY HOSPITAL

144 State Street
Portland, ME 04101-3776

ARTIS ZEE CEILING

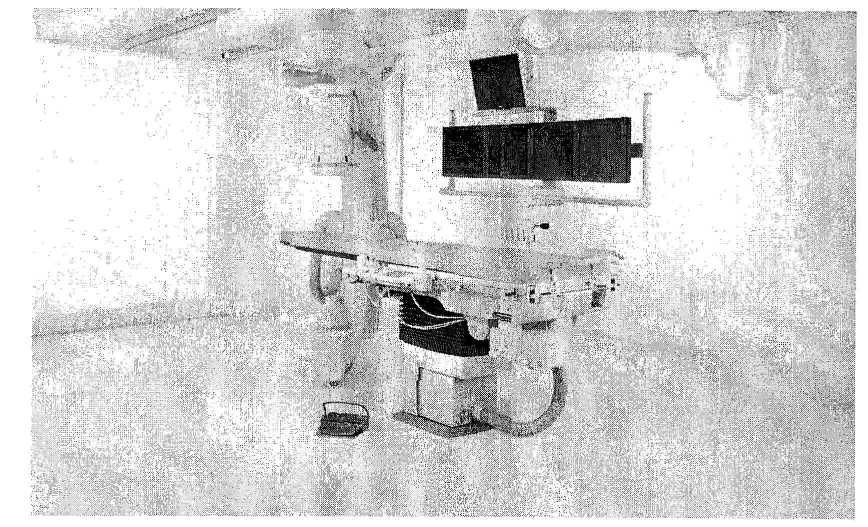

Contents:

Sheet No.	Description
A-101	EQUIPMENT LAYOUT-DETAILS, LEGEND, AND NOTES
A-102	REFLECTED CEILING, SAFETY/SERVICE CLEARANCE PLAN
S-101	STRUCTURAL FLOOR PLAN-DETAILS AND NOTES
S-102	STRUCTURAL CEILING PLAN-DETAILS AND NOTES
E-101	ELECTRICAL PLAN(S)-LEGEND AND NOTES
E-102	ELECTRICAL PLAN-LEGEND AND NOTES
E-501	ELECTRICAL DETAILS AND NOTES
M-101	MECHANICAL PLAN-DETAILS AND NOTES

Project Contacts:

Siemens
Project Manager
Rich Deister
Phone: (207) 712-3205

rich.deister@siemens.com

Planner
Joan Paolucci

Project #: 1200537

SIEMENS

SIEMENS MEDICAL SOLUTIONS
51 Valley Stream Parkway
Malvern, PA 19355
www.usa.siemens.com/medical

MERCY HOSPITAL • ARTIS ZEE CEILING PROCEDURE ROOM

Issue #: 0
Date: 08/17/12

SIEMENS

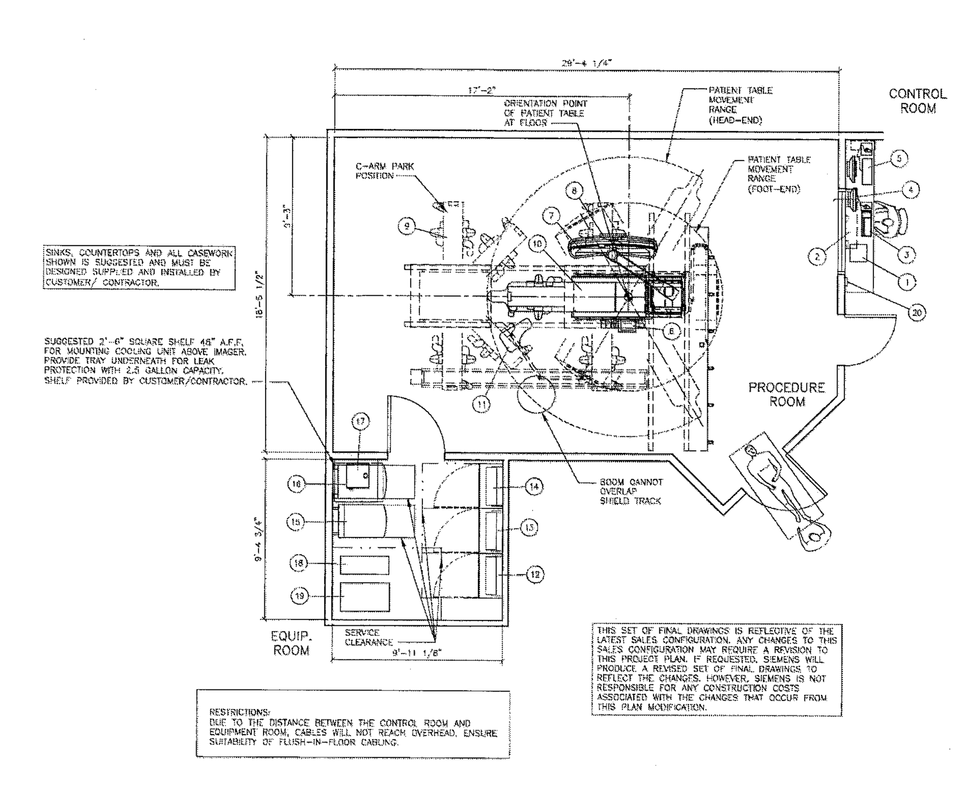

SINKS, COUNTERTOPS AND ALL CASEWORK SHOWN IS SUGGESTED AND MUST BE DESIGNED SUPPLIED AND INSTALLED BY CUSTOMER/ CONTRACTOR.

SUGGESTED 2'-6" SQUARE SHELF 48" A.F.F. FOR MOUNTING COOLING UNIT ABOVE IMAGER. PROVIDE TRAY UNDERNEATH FOR LEAK PROTECTION WITH 2.5 GALLON CAPACITY. SHELF PROVIDED BY CUSTOMER/CONTRACTOR.

THIS SET OF FINAL DRAWINGS IS REFLECTIVE OF THE LATEST SALES CONFIGURATION. ANY CHANGES TO THIS SALES CONFIGURATION MAY REQUIRE A REVISION TO THIS PROJECT PLAN. IF REQUESTED, SIEMENS WILL PRODUCE A REVISED SET OF FINAL DRAWINGS TO REFLECT THE CHANGES. HOWEVER, SIEMENS IS NOT RESPONSIBLE FOR ANY CONSTRUCTION COSTS ASSOCIATED WITH THE CHANGES THAT OCCUR FROM THIS PLAN MODIFICATION.

RESTRICTIONS:
DUE TO THE DISTANCE BETWEEN THE CONTROL ROOM AND EQUIPMENT ROOM, CABLES WILL NOT REACH OVERHEAD. ENSURE SUITABILITY OF FLUSH-IN-FLOOR CABLING.

ARCHITECTURAL EQUIPMENT PLAN

SCALE: 1/4" = 1'-0"

ROOM MEASUREMENTS

ALL ROOM MEASUREMENTS AND ROOM DETAIL SPECIFICATIONS MUST BE VERIFIED ON SITE PRIOR TO BEGINNING ANY CONSTRUCTION WORK.

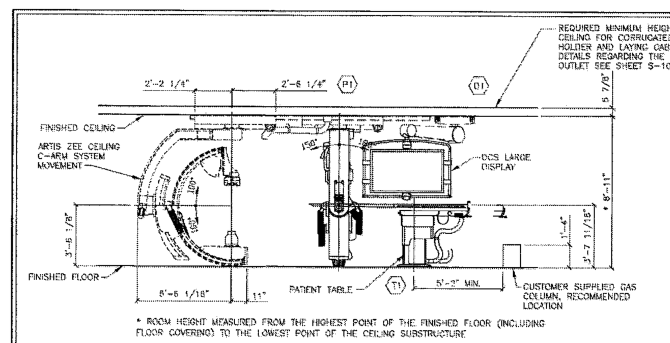

* ROOM HEIGHT MEASURED FROM THE HIGHEST POINT OF THE FINISHED FLOOR (INCLUDING FLOOR COVERING) TO THE LOWEST POINT OF THE CEILING SUBSTRUCTURE

1 ARTIS ZEE CEILING TYPICAL ELEVATION — SCALE: NONE

EQUIPMENT LEGEND

NO	DESCRIPTION	SMS SYM	WEIGHT (LBS)	BTU/HR TO AIR	W	D	H	REMARKS
1	ACC (ARCHIVE CONTROL EXTENSION)	[illegible]	13	N/A	12 1/4	11 3/4	4	MTD. ON CONTROL COUNTER
2	CONTROL ROOM DISTRIBUTOR	[illegible]	64	342	41 1/2	8 1/4	16 1/8	MTD. ON WALL
3	KEYBOARD	[illegible]	2.2	342	17 1/2	6 1/8	2 1/8	MTD. UNDER COUNTER OR ON CONSOLE
4	19" MONOCHROME LIVE DISPLAY	[illegible]	15	256	16 1/2	8 1/4	13 1/2	ON COUNTER OR CONSOLE
5	SYNGO X WORKSTATION TOWER, KEYBOARD, MONITOR (OPTION)		27	----	6 5/8	17 1/8	17 5/8	LOCATED BY CUSTOMER UNDER COUNTER
6	TABLE CONTROL MODULES	[illegible]	13.8	----	18 1/2	8 3/4	3 1/2	ON TABLE OR TROLLEY
7	DCS LARGE DISPLAY	[illegible]	407	1,708	167	45 3/8	50 3/4	CEILING SUSPENDED
8	BYPASS DISPLAY MONITOR FOR DCS LARGE DISPLAY	[illegible]	21	239	18 1/4	8 1/8	18	WALL MOUNTED
9	ARTIS ZEE CEILING C-ARM STAND	[illegible]	1,994	682	----	----	----	C-ARM CEILING SUSPENDED
10	PATIENT TABLE (TILT TABLE)	[illegible]	1,169	683	----	----	----	TABLE FLOOR MOUNTED
11	UPPER BODY RADIATION SHIELD 4 M TRACK	[illegible]	106	----	----	----	----	TRACK MOUNTED
12	POLYDOROS A100 (POWER UNIT 1)	[illegible]	662	3,413	31 1/2	17 1/8	67	FLOOR MOUNTED
13	CABLE CABINET	[illegible]	265	----	31 1/2	17 1/8	67	FLOOR MOUNTED
14	SYSTEM CONTROL CABINET	[illegible]	518	5,460	31 1/2	17 1/8	67	FLOOR MOUNTED
15	LARGE DISPLAY CONTAINER FOR DCS LARGE DISPLAY	[illegible]	253	1,535	23	37 1/2	28 3/8	MTD. ON CASTERS
16	AXIS IMAGE SYSTEM	[illegible]	331	4,347	23 3/4	37 1/4	28	MTD. ON CASTERS
17	KLUVER COOLING UNIT	[illegible]	93	13,649	18 3/4	15 1/2	18 3/4	FLOOR OR SHELF MOUNTED
18	POWERWARE 9355 15kVA UPS AND BATTERY	[illegible]	577	8,134	12 3/4	33 1/2	47 3/4	SEE MFG REQUIREMENTS
19	POWERWARE 9355 OUTPUT TRANSFORMER CABINET	[illegible]	535	----	20	34 1/8	66	SEE MFG REQUIREMENTS
20	POWERWARE 9355 REMOTE PANEL MONITOR	[illegible]	----	----	5 7/8	1 5/8	4 7/8	SEE MFG REQUIREMENTS

(W, D, H = DIMENSIONS (INCHES))

STATE AGENCY REVIEW

PRIOR TO SIEMENS EQUIPMENT INSTALLATION, APPROVAL OF CONSTRUCTION OR STRUCTURAL MODIFICATIONS UTILIZING X-RAY FOR DIAGNOSTIC OR THERAPEUTIC PURPOSES, MUST BE OBTAINED BY THE CUSTOMER FROM THE APPROPRIATE STATE AGENCY, IF APPLICABLE.

STORAGE

TEMPERATURE RANGE: -4° F TO 140° F
RELATIVE HUMIDITY: 10% TO 95% NON CONDENSING
AIR PRESSURE: 500 hPa TO 1060 hPa

PACKAGING & TRANSPORT PATH

LARGEST CRATE WITH PACKING: 103.5"W x 46.50"D x 91.50"H
WEIGHT: 2,590 LBS.
LARGEST SINGLE PART WITH TRANSPORT CARRIAGE (MIN. DOOR OPENING) 97.25"L x 39.5"W x 75.0"H
WEIGHT: 2,006 LBS.

MAGNETIC FIELD PRECAUTIONS

THE PRESENCE OF MAGNETIC FIELDS IN THE VICINITY OF EQUIPMENT MAY HAVE AN ADVERSE EFFECT. IT IS THE CUSTOMER'S RESPONSIBILITY TO VERIFY THAT THE FOLLOWING VALUES ARE NOT EXCEEDED.

MAXIMUM ALLOWABLE MAGNETIC FIELD	DEVICES
1.0mT (10 GAUSS)	COMPUTERS, MAGNETIC DISK DRIVES, OSCILLOSCOPES, PROCESSORS
0.5mT (5 GAUSS)	X-RAY TUBES, B/W MONITORS, MAGNETIC DATA CARRIERS, DATA STORAGE DRIVES
0.2mT (2 GAUSS)	SIEMENS CT SCANNERS
0.15mT (1.5 GAUSS)	COLOR MONITORS, SIEMENS LINEAR ACCELERATORS
0.05mT (0.5 GAUSS)	X-RAY IMAGE INTENSIFIERS, GAMMA CAMERAS, PET/CYCLOTRON, OTHER LINEAR ACCELERATORS

MAGNETIC FIELDS SHOULD BE MEASURED PRIOR TO DELIVERY

ANGIOGRAPHY/CARDIAC

TYPICAL EXAM ROOM EQUIPMENT

- CRASH CART
- IV POLES
- LEAD SHIELD
- LIGHTING
- INJECTOR
- ANESTHESIA EQUIPMENT
- CATHETERS
- SCRUB AREA
- VIEW BOX
- GUIDE WIRES
- APRON RACK
- STERILE TRAY
- GASES
- OUTLETS
- PHYSIOLOGICAL MONITORING

EQUIPMENT SUPPLIED AND INSTALLED BY CUSTOMER

ENVIRONMENTAL/POWER AUDIT

AS AN INDICATION OF OUR COMMITMENT TO QUALITY, SIEMENS MAY, AT NO COST TO YOUR FACILITY, CHECK THE OPERATING ENVIRONMENT AFTER SYSTEM TURNOVER TO DETERMINE IF THE REQUIREMENTS FOR TEMPERATURE, HUMIDITY, POWER, AND GROUNDING ARE MET AS PER SIEMENS' PUBLISHED SPECIFICATIONS. SIEMENS WILL GENERATE A WRITTEN REPORT DETAILING THE ENVIRONMENTAL AND ELECTRICAL CONDITION OF THE SITE AFTER TURNOVER AND WILL SHARE THE REPORT WITH YOU. IN THE EVENT WE IDENTIFY ANY ENVIRONMENTAL/POWER DEFICIENCIES AT THE SITE, YOUR FACILITY WILL BE REQUESTED TO CORRECT DEFICIENCIES WITHIN THIRTY (30) DAYS. SHOULD ANY CORRECTIVE ACTIONS BE NECESSARY, AND UPON REQUEST, SIEMENS WILL PROVIDE GUIDANCE IN AN EFFORT TO FACILITATE RESOLUTION. PLEASE BE ADVISED THAT AFTER 30 DAYS NOTICE ANY REPAIR OR MAINTENANCE SERVICES NECESSITATED BY SEVERE DEFICIENCIES WILL FALL OUTSIDE YOUR WARRANTY COVERAGE.

C-ARM TRANSPORT/STORAGE W/ FLAT PANEL DETECTOR

THE LIMITED TRANSPORT AND STORAGE CONDITIONS APPLY FOR THE FLAT DETECTOR MOUNTED ON THE C-ARM:

TEMPERATURE RANGE: 14° F TO 131° F
RELATIVE HUMIDITY: 20% TO 95% NON CONDENSING
AIR PRESSURE: 700 hPa TO 1060 hPa

ARCHITECTURAL NOTES

1) ALL PRELIMINARY EQUIPMENT LAYOUTS SUBMITTED BY SIEMENS MEDICAL SOLUTIONS, INC. (SMS HEREAFTER) ARE BASED ON THE RECOMMENDED SPACE NECESSARY FOR THE OPERATION AND SERVICEABILITY OF THE EQUIPMENT BEING PROPOSED. SMS WILL NOT SUBMIT AN EQUIPMENT LAYOUT THAT IS NOT IN THE BEST INTEREST OF BOTH THE CUSTOMER AND SMS. ALL EQUIPMENT LAYOUTS ARE BASED EITHER ON AN ACTUAL SITE LOCATION SURVEY OR ARCHITECTURAL DRAWINGS SUPPLIED TO SMS. SMS WILL NOT BE RESPONSIBLE FOR ANY ALTERATIONS THAT ENCROACH WITHIN DESIGNATED SAFETY AND SERVICE CLEARANCE ZONES AS INDICATED ON DRAWINGS (IE. PIPE CHASES, VENTILATION DUCTS, CASEWORK, AND SOFFITS, ETC.) MADE BY THE CUSTOMER OR REQUIRED BY A CUSTOMER'S ARCHITECTURAL FIRM ONCE PRELIMINARY DRAWINGS HAVE BEEN SUBMITTED AND APPROVED. DO NOT ALTER ANY SPECIFICATIONS AND/OR DIMENSIONS WITHOUT CONTACTING AND RECEIVING WRITTEN CONFIRMATION FROM SMS PROJECT MANAGER.
2) SMS IS NOT AN ARCHITECTURAL OR ENGINEERING FIRM. DRAWINGS SUPPLIED BY SMS ARE NOT CONSTRUCTION DRAWINGS. THEREFORE, THESE DRAWINGS ARE TO BE USED ONLY FOR INFORMATION TO COMPLEMENT ACTUAL CONSTRUCTION DRAWINGS AVAILABLE FROM A CUSTOMER APPOINTED ARCHITECTURAL REPRESENTATIVE OR A CUSTOMER'S ENGINEERING DESIGN GROUP. THE CUSTOMER'S ARCHITECT AND GENERAL CONTRACTOR SHALL BE ULTIMATELY RESPONSIBLE FOR COMPLIANCE WITH ALL APPLICABLE CODES AND PROFESSIONAL DESIGN REQUIREMENTS.
3) THE CUSTOMER IS RESPONSIBLE FOR ALL ROOM AND AREA PREPARATION COSTS, PROFESSIONAL FEES, PERMITS, REPORTS, AND INSPECTION FEES.
4) EQUIPMENT WARRANTIES, EXPRESSED OR IMPLIED ON THE PART OF SMS SHALL BE CONTINGENT UPON STRICT COMPLIANCE WITH THE ARCHITECTURAL, STRUCTURAL, ELECTRICAL, MECHANICAL AND RECOMMENDATIONS AND REQUIREMENTS CONTAINED IN THESE DRAWINGS, UNLESS SPECIFIED OTHERWISE.
5) ALL DIMENSIONS SHOWN ARE TAKEN FROM FINISHED SURFACES UNLESS SPECIFIED OTHERWISE.
6) THIS DRAWING DOES NOT PROVIDE RADIATION SHIELDING REQUIREMENTS FOR X-RAY AND ASSOCIATED EQUIPMENT. THE CUSTOMER IS RESPONSIBLE FOR CONSULTING WITH A REGISTERED RADIATION PHYSICIST. ACTUAL PROTECTION REQUIREMENTS SHALL BE SPECIFIED BY A REGISTERED RADIATION PHYSICIST AT CUSTOMER'S ENGAGEMENT AND EXPENSE. RESPONSIBILITY FOR ALL INFORMATION AS TO THE ROOM LOCATION, USE, AND NUMBER OF ANTICIPATED EXAMINATIONS TO BE PERFORMED PER TIME PERIOD SHALL BE PROVIDED TO THE PHYSICIST BY THE CUSTOMER. THE CUSTOMER SHALL FURTHER TAKE ALL RESPONSIBILITY IN THE COMMUNICATION AND COORDINATION OF ACTIVITIES OF THE RADIATION PHYSICIST AND THE ARCHITECTURAL REPRESENTATIVE.
7) SMS SHALL BE RESPONSIBLE FOR SMS EQUIPMENT INSTALLATION AND CALIBRATION, CONNECTION AND INSTALLATION OF SMS PROVIDED CABLES, AND CONNECTION OF CONTRACTOR PROVIDED WIRES TO SMS EQUIPMENT. IN THE EVENT THAT SPECIFIC TRADE RULES OR LICENSE REQUIREMENTS PROHIBIT THIS, THE CUSTOMER SHALL INITIATE THE SERVICES OF APPROVED OTHER CONTRACTORS AND PAY FOR SELECTED, APPROVED PARTIES TO PERFORM THIS WORK WITH JOB SUPERVISION TO BE PROVIDED BY SMS. CALIBRATION WHEN ACCOMPLISHED OUTSIDE OF NORMAL INSTALLATION SEQUENCES DUE TO CONTRACTOR OR TRADE RULE ACTIONS OR REQUIREMENTS SHALL BE SUPPORTED BY, CHARGED TO, AND ACCEPTED BY THE CUSTOMER AS AN ADDITIONAL INSTALLATION EXPENSE.
8) THE CUSTOMER SHALL VERIFY WITH SMS PROJECT MANAGER FINAL INSTALLATION DRAWINGS THE LOCATIONS AND TRAVEL OF ALL ANCILLARY EQUIPMENT TO BE CEILING OR WALL MOUNTED (IE: O.R. LIGHTS, MEDICAL GAS COLUMNS, PHYSIOLOGICAL MONITORING, INJECTORS, CRT PLATFORMS, SPRINKLER HEADS, SMOKE DETECTORS, ELECTRICAL OUTLETS, HVAC GRILLES, SPEAKERS, AND GENERAL ROOM LIGHTING, ETC.).
9) THE GENERAL CONTRACTOR/CUSTOMER SHALL BE RESPONSIBLE FOR ALL FINAL PAINT, TOUCH-UP AND ANY COSMETIC OR TRIM WORK WHICH NEEDS TO BE OR IS REQUIRED TO BE COMPLETED AFTER THE INSTALLATION OF THE SMS EQUIPMENT AND ANY ASSOCIATED SUPPORT APPARATUS.

SITE READINESS GUIDELINES

THE FOLLOWING GENERAL CONDITIONS ARE NECESSARY TO HAVE THE STATUS OF "READY SITE":
1) PROPER POWER AVAILABLE AT SIEMENS EQUIPMENT POWER CABINET LOCATION AND ALL POWER OUTLETS FUNCTIONING.
2) AIR CONDITIONING/HUMIDIFICATION SYSTEMS COMPLETE, TESTED, AND FUNCTIONING PROPERLY ACCORDING TO SIEMENS SPECIFICATIONS.
3) PROPER LIGHTING INSTALLED AND FUNCTIONING.
4) PLUMBING COMPLETE EXCEPT FOR ANY FINAL CONNECTIONS TO SIEMENS EQUIPMENT.
5) ALL CABLE TRAYS/DUCTS/CONDUITS CORRECTLY SIZED, LOCATED, AND INSTALLED ACCORDING TO THE SIEMENS DRAWINGS.
6) ALL REINFORCEMENT PLATES/UNISTRUT INSTALLED AS REQUIRED.
7) ROOM FOR EQUIPMENT INSTALLATION AND IMMEDIATE VICINITY IS DUST-FREE AND IS TO REMAIN SO FOR THE DURATION OF THE INSTALLATION.
8) A SECURE AREA (APPROXIMATELY 10' x 10') IS AVAILABLE AT EQUIPMENT DELIVERY FOR PARTS AND INSTALLATION TOOLS.
9) CUSTOMER SUPPLIED CAMERAS AND PROCESSORS INSTALLED.
10) CUSTOMER APPROVAL FOR SIEMENS REMOTE SERVICES (SRS) CONNECTION, AND CUSTOMER'S I.T. CONTACT INFORMATION AND IP ADDRESSES ESTABLISHED.
11) WALLS TO BE PRIMED AND PAINTED, FLOORS TO BE TILED EXCEPT IN AREAS OF THE EQUIPMENT BASE PLATES.

IF THESE CONDITIONS ARE NOT MET, THE SIEMENS PROJECT MANAGER AND THE DESIGNATED SIEMENS INSTALLATION SUPERVISOR SHALL RESCHEDULE THE INSTALLATION START DATE. NOTE: ADDITIONAL COST MAY BE INCURRED BY THE CUSTOMER/CONTRACTOR AND DELIVERY DATES MAY NEED TO BE RESCHEDULED, WHEN THE SIEMENS SITE READINESS GUIDELINES ARE NOT MET.

RESOURCE LIST (SMS USE ONLY)

DESIGNATION	PG NUMBER	DATE
ARTIS ZEE CEILING	AXA4-060.891.01.03.02	12.09
DCS (DISPLAY CEILING SUSPENSION)	AXA4-700.891.01.07.02	10.09

ARTIS ZEE CEILING 08/07/12

CEILING HEIGHT REQUIREMENT: 8 FT. - 11 IN.

PROJECT MANAGER: RICH DEISTER
TEL: (207) 712-3205
VMAIL: EXT:
FAX: (207) 929-3776
EMAIL: RICH.DEISTER@SIEMENS.COM

SIEMENS

MERCY HOSPITAL
144 STATE STREET, PORTLAND, ME 04101-3776
PROCEDURE ROOM – ARTIS ZEE CEILING

THE USE OR REPRODUCTION OF THIS TITLE BLOCK WITHOUT SIEMENS AUTHORIZATION WILL RESULT IN PROSECUTION UNDER FULL EXTENT OF THE LAW.
ALL RIGHTS ARE RESERVED.

SYM	DATE	DESCRIPTION
0	08/17/12	R-101RA VERSION DATED 02/17/12 APPROVED BY CUSTOMER FOR FINALS

–ISSUE BLOCK–

PROJECT #: 1200537 — SHEET 1 OF 8 — DRAWN BY: J.PAOLUCCI — SCALE: AS NOTED — REF. #: 30158119 — DATE: 08/17/12 — CHECKED:

SHEET: A-101

ATTENTION:
- THIS DRAWING IS DESIGNED TO CONFORM TO FEATURES AND EQUIPMENT REQUIREMENTS PRESENTED AT THE TIME OF THEIR PREPARATION. SINCE BOTH THESE FACTORS ARE SUBJECT TO DESIGN MODIFICATION, THEY ARE NOT TO BE USED FOR CONSTRUCTION PURPOSES.
- THIS SET OF PLANS REPRESENTS A COMPLETE SET OF DETAILS AND SHOULD NOT BE SEPARATED.
- IT IS RECOMMENDED THAT THE SIEMENS DRAWINGS BE INCORPORATED WITH THE CONSTRUCTION DOCUMENTS FOR REFERENCE.
- ALL DIMENSIONS SHOWN ON THIS DRAWING ARE FROM FINISHED SURFACES.
- THIS DRAWING DOES NOT PROVIDE RADIATION SHIELDING REQUIREMENTS FOR X-RAY AND ASSOCIATED EQUIPMENT. THE CUSTOMER IS RESPONSIBLE FOR CONSULTING WITH A REGISTERED RADIATION PHYSICIST TO SPECIFY RADIATION PROTECTION.

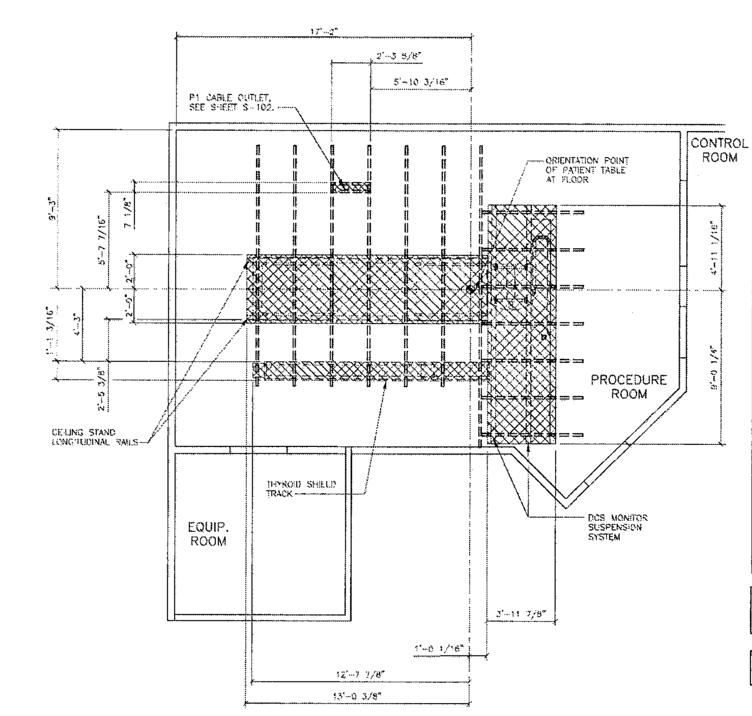

ATTENTION! LIGHTING AND HVAC DUCTS HAVING THE POTENTIAL TO HEAT OR COOL SIEMENS COMPONENTS MUST NOT BE LOCATED WITHIN SIEMENS CEILING RAIL SYSTEMS AS INDICATED BY THE SHADED AREAS ON THIS PLAN. SPRINKLER HEADS MUST NOT BE LOCATED WITHIN THE SHADED AREAS AS WELL. IF REQUIRED, LAMINAR AIRFLOW DIFFUSERS MAY BE LOCATED WITHIN SIEMENS CEILING RAIL SYSTEMS PROVIDED THEY DO NOT EXTEND BELOW THE FINISHED CEILING OR HEAT/COOL SIEMENS EQUIPMENT. IF PLACED WITHIN SIEMENS RAIL SYSTEMS, THE CUSTOMER MUST ACCEPT RESPONSIBILITY FOR THE FACT THAT, DEPENDING ON THE POSITION OF THE CARRIAGE WITHIN THE CEILING RAILS, THERE IS POTENTIAL FOR CERTAIN DIFFUSERS IN THIS AREA TO BE BLOCKED. THE CUSTOMER MUST ALSO ACCEPT RESPONSIBILITY FOR POTENTIAL DIFFICULTIES IN SERVICING THE CUSTOMER'S MECHANICAL EQUIPMENT IN THE CEILING. IF PLACED WITHIN THESE SHADED AREAS. PLEASE COORDINATE THE PLACEMENT OF THESE ITEMS WITH THE SIEMENS PROJECT MANAGER. SIEMENS SHALL BEAR NO RESPONSIBILITY FOR ANY EQUIPMENT DAMAGES RESULTING FROM THE INSTALLATION OF CUSTOMER-SUPPLIED INFRASTRUCTURE NOT ADHERING TO THE ABOVE STATED REQUIREMENTS.

NOTE:
FOR ALL WEIGHTS AND SIZES OF EQUIPMENT SHOWN ON THIS PLAN PLEASE REFER TO THE EQUIPMENT LEGEND ON SHEET A-101.

FOR UNISTRUT PLACEMENT SEE SHEET S-102.

REFLECTED CEILING PLAN — SCALE: 1/4" = 1'-0"

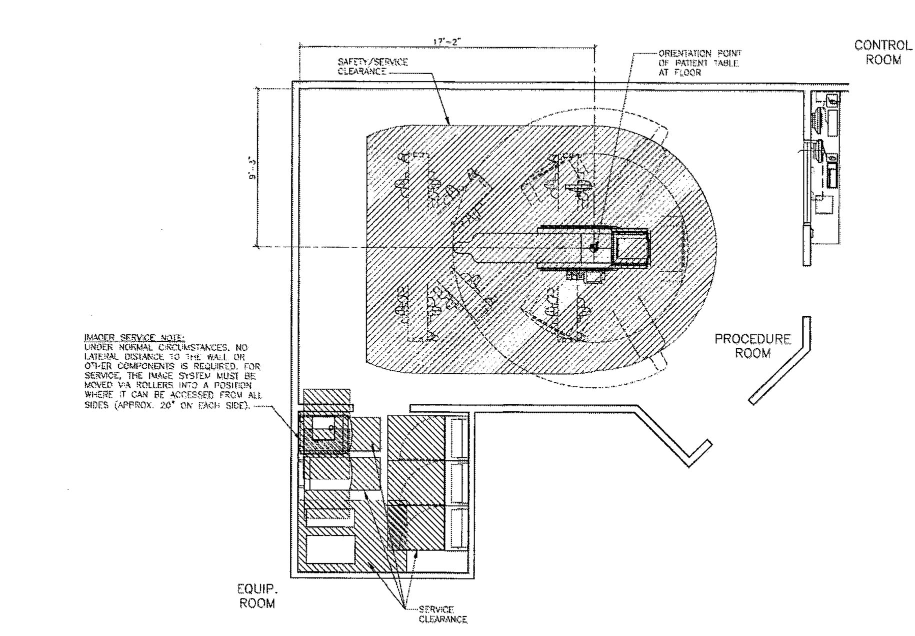

IMAGER SERVICE NOTE:
UNDER NORMAL CIRCUMSTANCES, NO LATERAL DISTANCE TO THE WALL OR OTHER COMPONENTS IS REQUIRED. FOR SERVICE, THE IMAGE SYSTEM MUST BE MOVED VIA ROLLERS INTO A POSITION WHERE IT CAN BE ACCESSED FROM ALL SIDES (APPROX. 20" ON EACH SIDE).

SAFETY/SERVICE CLEARANCE PLAN — SCALE: 1/4" = 1'-0"

LIGHTING GUIDELINES

ROOM LIGHTING IS THE RESPONSIBILITY OF THE CUSTOMER. HOWEVER, SIEMENS OFFERS THE FOLLOWING RECOMMENDATIONS, AS A GENERAL GUIDE ONLY, WHEN PLANNING FOR LIGHTING.

1) OVERALL GENERAL ILLUMINATION IS NECESSARY FOR CLEAN UP AND MAINTENANCE OF EQUIPMENT. FLUORESCENT LIGHTING IS USUALLY PROVIDED FOR THIS PURPOSE AND SHOULD BE A MINIMUM LEVEL OF 50 FOOTCANDLES. TO MINIMIZE GLARE AND PROVIDE VISUAL COMFORT, AN INDIRECT LIGHTING SYSTEM SHOULD BE CONSIDERED TOGETHER WITH COLOR IMPROVED FLUORESCENT LAMPS.

2) THE GENERAL LIGHTING SHOULD HAVE A MULTI-LEVEL SWITCHING CAPABILITY TO ALLOW FLEXIBILITY OF AMBIENT LIGHTING LEVELS.

3) BECAUSE FLUOROSCOPY PROCEDURES ARE NOW PERFORMED WITH IMAGE INTENSIFICATION WITH VISUALIZATION ON A TELEVISION MONITOR, COMPLETE ROOM DARKNESS IS NO LONGER NECESSARY. HOWEVER, IN ORDER TO PERMIT PROPER READINGS OF THE MONITOR, THE ROOM LIGHTING INTENSITY MUST BE CAPABLE OF BEING LOWERED TO BETWEEN 2 TO 5 FOOTCANDLES. THIS CAN BE USUALLY ACCOMPLISHED BY MEANS OF A FOOT SWITCH.

THE FOOT SWITCH CONTROL ARRANGEMENT IS SUCH THAT, WHEN OPERATED, A SEPARATE LIGHTING SYSTEM FOR FLUORSCOPY IS TURNED "ON" AND AT THE SAME TIME, THROUGH AN INTERLOCK, THE GENERAL LIGHTING SYSTEM IS TURNED "OFF". IF A VARIABLE LOW LEVEL LIGHTING INTENSITY IS DESIRED BY THE CUSTOMER, THEN A DIMMER CONTROL CAN BE ADDED. IN THIS CASE, INCANDESCENT LIGHTING IS RECOMMENDED FOR THIS PURPOSE. FLUORESCENT DIMMING IS NOT RECOMMENDED.

CEILING NOTES

1) ALL CEILING MOUNTED LIGHT FIXTURES, MECHANICAL REGISTERS AND SPRINKLER HEADS SHALL BE FLUSH WITH FINISHED CEILING, SHALL BE OUTSIDE OF ALL HATCHED AREAS AND SHALL BE SPECIFIED BY THE ARCHITECT OF RECORD AND SUBSEQUENT CONSULTING ENGINEERS.

2) THE ACTUAL CEILING DESIGN AND COORDINATION OF LIGHTING AND MECHANICAL SYSTEMS SHALL BE THE RESPONSIBILITY OF THE ARCHITECT OF RECORD AND HIS SUBSEQUENT CONSULTING ENGINEERS.

3) THE CUSTOMER/CONTRACTOR SHALL BE RESPONSIBLE FOR FABRICATING, SUPPLYING AND INSTALLING ALL LIGHT, MECHANICAL AND STRUCTURAL SUPPORTING SYSTEMS. SIEMENS MEDICAL SOLUTIONS INC. IS ONLY RESPONSIBLE FOR THE SUPPLYING, INSTALLING AND CALIBRATION OF SMS EQUIPMENT AS SPECIFIED ON THE EQUIPMENT SCHEDULE AS SHOWN ON SHEET A-101.

4) ALL ELECTRICAL AND STRUCTURAL SYSTEMS SHOWN ON THE REFLECTED CEILING PLAN HAVE BEEN COORDINATED WITH THE EQUIPMENT LOCATIONS AS SHOWN ON THE 1/4" SCALE ARCHITECTURAL EQUIPMENT PLAN (SHEET A-101). ANY CHANGES TO THE SMS EQUIPMENT CONFIGURATION AS SHOWN, DUE TO PLACEMENT OF LIGHTING, STRUCTURAL, ELECTRICAL AND MECHANICAL SYSTEMS, MUST BE APPROVED IN WRITING BY THE SMS PROJECT MANAGER PRIOR TO THE COMPLETION OF CONSTRUCTION DOCUMENTS.

CEILING HEIGHT REQUIREMENT: 8 FT. - 11 IN.

ARTIS ZEE CEILING 08/07/12

PROJECT MANAGER: RICH DEISTER
TEL: (207) 712-3205
VMAIL: EXT:
FAX: (207) 929-3776
EMAIL: RICH.DEISTER@SIEMENS.COM

SIEMENS

MERCY HOSPITAL
144 STATE STREET, PORTLAND, ME 04101-3776
PROCEDURE ROOM – ARTIS ZEE CEILING

SYM	DATE	DESCRIPTION
0	08/17/12	R-101RA VERSION DATED 02/17/12 APPROVED BY CUSTOMER FOR FINALS

–ISSUE BLOCK–

PROJECT #: 1200537 — SHEET 2 OF 8 — DRAWN BY: J.PAOLUCCI — SCALE: AS NOTED — REF. #: 30158119 — DATE: 08/17/12 — CHECKED:

SHEET: A-102

ATTENTION:

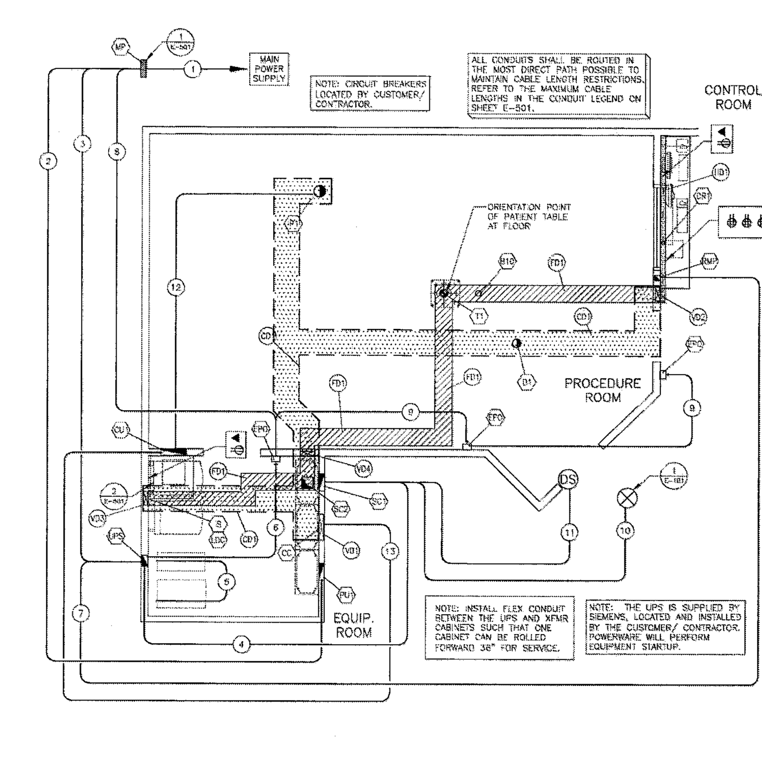

DCS LARGE DISPLAY NOTES:

THE DCS LARGE DISPLAY CONTAINS 21 POTENTIAL INPUTS FOR SIEMENS AND CUSTOMER-SUPPLIED VIDEO SIGNALS. IN AN EFFORT TO SUPPORT UPGRADES AND TO ENSURE VIDEO CABLES FOR ALL APPLICABLE SOURCES ARE CONTAINED IN A RACEWAY DURING INSTALLATION, A CEILING DUCT IS BEING PROPOSED FROM THE CONTROL ROOM TO THE LARGE DISPLAY CONTAINER (LDC) SPECIFICALLY FOR THE PURPOSE OF CARRYING THESE CABLES. FOR HARD CEILINGS, INSTALL ACCESS PANELS AS REQUIRED FOR INSTALLATION OF CABLES. OTHERWISE, A 2 1/2"Ø CONDUIT IS REQUIRED FOR EACH SOURCE. COORDINATE CABLING REQUIREMENTS TO THE "LDC" FOR VIDEO SOURCES NOT RESIDING IN THE CONTROL ROOM.

NOTE: EACH CUSTOMER-SUPPLIED INPUT WILL REQUIRE AT LEAST ONE 110V OUTLET FOR THE SIEMENS-SUPPLIED CONVERTER BOX. IF THE CUSTOMER'S SOURCE HAS ONLY ONE VIDEO OUTPUT, A SIEMENS-SUPPLIED SPLITTER BOX WILL BE REQUIRED, WHICH REQUIRES AN ADDITIONAL 110V OUTLET. PLEASE COORDINATE THE EXACT REQUIREMENTS FOR POWER. A WORST-CASE NUMBER OF OUTLETS IS BEING SHOWN ON THE PLANS.

ELECTRICAL RACEWAY PLAN — SCALE: 1/4" = 1'-0"

SYMBOLS

ALL MAY NOT APPLY

- CIRCUIT BREAKER BY CUSTOMER/CONTRACTOR
- OPENING IN RACEWAY OR TRENCHDUCT
- PULLBOX IN (FLOOR/WALL/CEILING)
- OPENING IN ACCESS FLOORING
- WARNING LIGHT (X-RAY ON)
- DOOR SAFETY SWITCH
- (EPO) EMERGENCY POWER OFF BUTTON
- TRENCHDUCT
- CEILING DUCT
- UNDER FLOOR DUCT
- SURFACE DUCT
- VERTICAL DUCT
- ETHERNET CONNECTION TO CUSTOMER'S INFORMATION SYSTEMS NETWORK (VERIFY WITH SMS PROJECT MANAGER)
- 110 VOLT, 20 AMP, HOSPITAL GRADE DUPLEX OUTLET
- 110 VOLT, 20 AMP, HOSPITAL GRADE QUAD OUTLET

POWER QUALITY

POOR POWER WILL ALTER EQUIPMENT PERFORMANCE

IT IS IN THE CUSTOMER'S INTEREST THAT THE ELECTRICAL CONTRACTOR BE RESPONSIBLE FOR TESTING AND VERIFYING THAT THE EQUIPMENT POWER SUPPLY COMPLIES WITH THE SIEMENS SPECIFICATIONS.

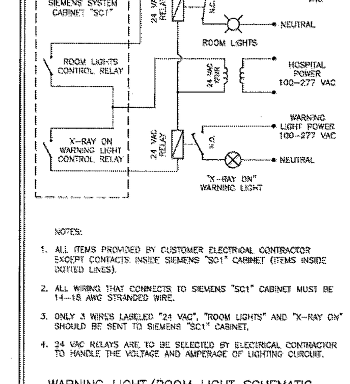

NOTES:
1. ALL ITEMS PROVIDED BY CUSTOMER ELECTRICAL CONTRACTOR EXCEPT CONTACTS INSIDE SIEMENS "SC1" CABINET (ITEMS INSIDE DOTTED LINES).
2. ALL WIRING THAT CONNECTS TO SIEMENS "SC1" CABINET MUST BE 14-18 AWG STRANDED WIRE.
3. ONLY 3 WIRES LABELED "24 VAC", "ROOM LIGHTS" AND "X-RAY ON" SHOULD BE SENT TO SIEMENS "SC1" CABINET.
4. 24 VAC RELAYS ARE TO BE SELECTED BY ELECTRICAL CONTRACTOR TO HANDLE THE VOLTAGE AND AMPERAGE OF LIGHTING CIRCUIT.

WARNING LIGHT/ROOM LIGHT SCHEMATIC

3 LIGHTING DETAIL — SCALE: NONE

POLYDOROS A100

X-RAY GENERATOR POWER SUPPLY REQUIREMENTS

WIRING SYSTEM:	480Y/277V-3 PHASE-4-W, 60 HZ.
MINIMUM POWER SUPPLY:	225 KVA DISTRIBUTION XFMR
X-RAY GENERATOR NAMEPLATE MOMENTARY RATING: (RADIOGRAPHIC EXPOSURE)	160 KVA, 194 AMPS, MAXIMUM RMS (IN-RUSH) CURRENT
X-RAY GENERATOR NAMEPLATE LONG-TIME RATING: (FLUOROSCOPY)	8 KVA, 25 AMPS, FULL LOAD CURRENT
INCOMING LINE IMPEDANCE (mΩ)	≤ 160
MINIMUM CIRCUIT BREAKER SIZE: (BASED ON N.E.C. 517-73)	100 AMPS

POWER QUALITY PARAMETERS

MAXIMUM LINE VOLTAGE VARIATION	±10% OF SYSTEM VOLTAGE
MAXIMUM ALLOWABLE MOMENTARY LINE VOLTAGE VARIATION AT GENERATOR PEAK OUTPUT OF 160 KVA:	2% OF CONNECTED LINE VOLTAGE
PHASE BALANCE:	2% MAX. BETWEEN ANY 2 PHASES
FREQUENCY VARIATION:	± 1 HZ. OF 60 HZ
VOLTAGE SURGES:	10% MAX. ABOVE CONNECTED LINE VOLTAGE *AT 20 MILLISECONDS MAXIMUM DURATION.
VOLTAGE SAGS:	10% MAX. BELOW CONNECTED LINE VOLTAGE *AT 20 MILLISECONDS MAXIMUM DURATION.
LINE TRANSIENTS (SPIKES):	50% ABOVE CONNECTED LINE VOLTAGE *AT 5 MILLISECONDS MAXIMUM DURATION.
NEUTRAL TO GROUND:	±0.5 VOLTS MAX. POTENTIAL
NEUTRAL TO GROUND SURGES:	±10 VOLTS MAX. POTENTIAL
SYSTEM GROUNDING IMPEDANCE:	0.25 OHMS MAX.

POWER SUPPLY NOTES:
1. INCOMING POWER SUPPLIES FOR SIEMENS EQUIPMENT SHOULD BE DEDICATED (BACK TO SOURCE), ISOLATED AND INSULATED FROM ANY OTHER EQUIPMENT SUCH AS ELEVATORS, GENERATORS, HVAC SYSTEMS, ETC.

2. SIEMENS MEDICAL SOLUTIONS, INC. RECOMMENDS THAT THE INCOMING POWER LINES BE ANALYZED WITH RESPECT TO TRANSIENT SURGES AND IMPULSES, SAGS AND OVERVOLTAGES.

* CONNECTED LINE VOLTAGE IS THE ACTUAL VOLTAGE MEASURED IN THE FIELD AFTER THE POWER TRANSFORMER IS CONNECTED TO ITS LIVE LOAD AND IS THE VOLTAGE USED BY SIEMENS TO CALIBRATE THE X-RAY EQUIPMENT.

ELECTRICAL LEGEND

SUPPLIED AND INSTALLED BY CUSTOMER/CONTRACTOR

SYM	SIZE	DESCRIPTION	REMARKS
[illegible]	4"ø	BUSHED OPENING IN FLOOR DUCT "FD1" COVER.	TABLE ACCESSORIES
[illegible]	18" X 8"	BUSHED OPENING IN VERTICAL DUCT "VD1" COVER AT FLOOR LINE.	CABLE CABINET
[illegible]	3"ø	BUSHED OPENING IN TOP OF HORIZONTAL DUCT "HD1".	CONTROL ROOM DISTRIBUTOR
[illegible]	18" X 18" X 4"	PULL BOX MOUNTED FLUSH IN FINISHED WALL AT SHELF TOP LEVEL. PROVIDE BOX WITH REMOVABLE FRONT COVER AND (1) 4"ø BUSHING IN CENTER OF REMOVABLE COVER FOR CABLE EXIT. SEE PLAN FOR LOCATION.	COOLING UNIT
[illegible]	6"ø	BUSHED OPENING IN BOTTOM OF CEILING DUCT "CD1". IF REQUIRED BY LOCAL CODE, PROVIDE 4"ø SLEEVE EXTENDING FROM DUCT TO FLUSH WITH FINISHED CEILING. PROVIDE BUSHING AT CEILING LINE.	EXAM ROOM MONITORS (DCS)
[illegible]	----	DOOR SWITCH, PROVIDED AND INSTALLED BY ELECTRICAL CONTRACTOR. SEE PLAN.	DOOR SWITCH
[illegible]	----	EMERGENCY OFF BUTTONS FOR CIRCUIT BREAKERS. EPO'S MUST PREVENT RESETTING OF CIRCUIT BREAKERS WHEN IN OFF POSITION. EPO'S MUST BE RECESSED OR SHIELDED. SEE PLAN FOR LOCATIONS.	EMERGENCY POWER OFF
[illegible]	6"ø	BUSHED OPENING IN VERTICAL DUCT "VD3" COVER AT FLOOR LINE.	AXIS IMAGE SYSTEM
[illegible]	6"ø	BUSHED OPENING IN VERTICAL DUCT "VD3" COVER AT FLOOR LINE.	LARGE DISPLAY CONTAINER
[illegible]	SIZED BY E.C.	MULTI BREAKER PANEL, SEE DETAIL "POWER DIAGRAM" SHEET E-501	BREAKER PANEL
[illegible]	8"ø	BUSHED OPENING IN BOTTOM OF CEILING DUCT "CD1". PROVIDE CORRESPONDING OPENING AT CEILING LINE.	C-ARM
[illegible]	AS REQUIRED	PULL BOX MOUNTED FLUSH IN FINISHED WALL AT FLOOR LINE. PROVIDE BOX WITH REMOVABLE FRONT COVER WITH 4"ø BUSHED OPENING AT BOTTOM OF COVER.	GENERATOR
[illegible]	AS REQUIRED	PULLBOX MOUNTED FLUSH IN FINISHED WALL AT HEIGHT COORDINATED WITH UPS REMOTE MONITOR PANEL.	UPS REMOTE MONITOR PANEL (15kVA, 40kVA, 160kVA, 300kVA)
[illegible]	AS REQUIRED	PULL BOX MOUNTED FLUSH IN FINISHED WALL AT FLOOR LINE. PROVIDE BOX WITH REMOVABLE FRONT COVER WITH 4"ø BUSHED OPENING AT BOTTOM OF COVER.	SYSTEM CABINET
[illegible]	8" X 8"	ACCESS OPENING IN "FD1"	
[illegible]	4"ø	BUSHED OPENING IN FLOOR DUCT "FD1" COVER.	TABLE
[illegible]	AS REQUIRED	PULL BOX MOUNTED FLUSH IN FINISHED WALL AT FLOOR LINE. PROVIDE BOX WITH REMOVABLE FRONT COVER WITH 4"ø BUSHED OPENING.	15kVA UPS
[illegible]	----	WARNING LIGHT TO INDICATE "X-RAY ON" SUPPLIED AND INSTALLED BY CONTRACTOR. MOUNT LIGHT ABOVE OR NEXT TO ENTRY DOOR. SEE PLAN FOR LOCATIONS.	WARNING LIGHT
[illegible]	3 1/2" X 18"	CEILING DUCT MOUNTED ABOVE FINISHED CEILING. PROVIDE DUCT WITH REMOVABLE TOP COVER AND OPENINGS AS SPECIFIED. CONNECT TO VERTICAL DUCT AS SHOWN.	CEILING DUCT
[illegible]	3 1/4" X 12"	FLOOR DUCT MOUNTED FLUSH IN FINISHED FLOOR. PROVIDE DUCT WITH REMOVABLE WATERTIGHT TOP COVER. SEE PLAN FOR LOCATION.	FLOOR DUCT
HD1	3 1/2" X 10"	HORIZONTAL DUCT MOUNTED ON FINISHED WALL AT FLOOR LINE. PROVIDE DUCT WITH REMOVABLE FRONT COVER. CONNECT TO VERTICAL DUCT "VD2" AS SHOWN.	HORIZONTAL WALL DUCT
VD1	3 1/2" X 16"	VERTICAL DUCT MOUNTED FLUSH IN FINISHED WALL. BEGIN DUCT AT FLOOR LINE AND EXTEND UP WALL TO "CD1".	VERTICAL DUCT
VD2	3 1/2" X 10"	VERTICAL DUCT MOUNTED FLUSH IN FINISHED WALL. BEGIN DUCT AT "FD1" AND EXTEND UP WALL "CD1".	VERTICAL DUCT
VD3	3 1/2" X 10"	VERTICAL DUCT MOUNTED FLUSH IN FINISHED WALL. BEGIN DUCT AT "FD1" AND EXTEND UP WALL "CD1".	VERTICAL DUCT
VD4	3 1/2" X 10"	VERTICAL DUCT MOUNTED FLUSH IN FINISHED WALL. BEGIN DUCT AT "FD1" AND EXTEND UP WALL "CD1".	VERTICAL DUCT
1	EC TO SIZE	CONDUIT FROM PANEL TO "MP"	SEE "POWER DIAGRAM" SHEET E-501
2	EC TO SIZE	CONDUIT FROM "MP" TO "UPS" WITH FLEX CONDUIT FROM UPS BOX TO TERMINATION ON UPS	SEE "POWER DIAGRAM" SHEET E-501
3	EC TO SIZE	CONDUIT FROM "MP" TO "PU1"	SEE "POWER DIAGRAM" SHEET E-501
4	EC TO SIZE	CONDUIT FROM "UPS" TO "SC1" WITH FLEX CONDUIT FROM UPS BOX TO TERMINATION ON OUTPUT TRANSFORMER CABINET.	SEE "POWER DIAGRAM" SHEET E-501
5	EC TO SIZE	FLEX CONDUIT FROM UPS CABINET TO OUTPUT TRANSFORMER CABINET	SEE "POWER DIAGRAM" SHEET E-501
6	3/4"ø	CONDUIT FROM "UPS" TO "EPO" WITH FLEX CONDUIT FROM UPS BOX TO TERMINATION ON UPS CABINET.	SEE "POWER DIAGRAM" SHEET E-501
7	3/4"ø	CONDUIT FROM "RMP" TO "UPS" WITH FLEX CONDUIT FROM UPS BOX TO TERMINATION ON UPS CABINET.	SEE "POWER DIAGRAM" SHEET E-501
8	3/4"ø	CONDUIT FROM "MP" TO "EPO"	SEE "POWER DIAGRAM" SHEET E-501
9	EC TO SIZE	CONDUIT FROM "EPO" TO "EPO"	EMERGENCY POWER OFF
10	EC TO SIZE	CONDUIT FROM "SC1" TO "WL"	WARNING LIGHT
11	EC TO SIZE	CONDUIT FROM "SC1" TO "DS"	DOOR SWITCH
12	2 1/2"ø	CONDUIT FROM "P1" TO "CU1"	MAXIMUM LENGTH 62'
13	2"ø	CONDUIT FROM "VD1" (SC1) TO "CU1"	MAXIMUM LENGTH 86'

POWER REQUIREMENTS

POLYDOROS-M / POLYDOROS A100 GENERATOR (PU1):
480 VOLTS, 3-PHASE, 160 KVA, 100 AMPS, 60 Hz

SYSTEM CONTROL CABINET (SC):
480 VOLTS, 3-PHASE, 8.5 KVA, 50 AMPS, 60 Hz.

ELECTRICAL NOTES

1) COMPLIANCE: ELECTRICAL WORK SHALL BE IN COMPLIANCE WITH THE LATEST EDITION OF THE NATIONAL ELECTRICAL CODE (NFPA-70), O.S.H.A. REGULATIONS, AS WELL AS APPLICABLE REGULATIONS OF CITY, COUNTY, STATE AND FEDERAL AGENCIES. PROVIDE MATERIALS AND EQUIPMENT THAT COMPLY TO ANSI, IEEE AND NEMA STANDARDS. WHERE APPLICABLE, PROVIDE ONLY MATERIALS AND PRODUCTS THAT ARE U.L. LISTED AND LABELED. CUSTOMER'S/CONTRACTOR'S WORK SHALL COMPLY WITH THE LATEST EDITION OF NECA STANDARD OF INSTALLATION.

2) QUALITY ASSURANCE: THE CONTRACTOR SHALL VERIFY EXISTING CONDITIONS IN THE FIELD TO INSURE THAT THE NEW WORK WILL FIT TO THE EXISTING STRUCTURE AS SHOWN ON THE DRAWINGS. SHOULD ANY CONDITIONS EXIST OR BE DISCOVERED THAT PREVENT THE INSTALLATION OF WORK AS SHOWN, THE CONTRACTOR SHALL NOTIFY THE OWNER'S REPRESENTATIVE PRIOR TO FABRICATION OF EQUIPMENT, OR THE PERFORMANCE OF ANY WORK THAT MAY BE AFFECTED. DO NOT ALTER DRAWINGS, DIMENSIONS, OR SPECIFICATIONS IN ANY WAY WITHOUT CONTACTING AND RECEIVING WRITTEN CONFIRMATION FROM SMS PROGRAM MANAGER. ALL DIMENSIONS ARE FROM FINISHED SURFACES. CONDUIT AND PULL BOXES TO BE INSTALLED BY THE CUSTOMER/CONTRACTOR WITH LOCATIONS BEING FIELD VERIFIED BY SMS PROJECT MANAGER.

3) POWER SUPPLY SOURCE: POWER SUPPLIES FOR SIEMENS MEDICAL SOLUTIONS EQUIPMENT SHALL BE DEDICATED SERVICES KEPT ENTIRELY FREE AND INDEPENDENT OF ALL OTHER BUILDING WIRING AND EQUIPMENT, SUCH AS: ELEVATORS, GENERATORS, PUMPS, HVAC SYSTEMS, ETC. THE CONTRACTOR SHALL COORDINATE THIS WORK WITH THE CUSTOMER/UTILITY COMPANY FIELD REPRESENTATIVE.

4) WORK FURNISHED BY CUSTOMER/CONTRACTOR: WORK NOT PROVIDED BY SIEMENS MEDICAL SOLUTIONS BUT SHOWN ON DRAWINGS TO BE FURNISHED AND INSTALLED BY CUSTOMER/CONTRACTOR INCLUDES THE FOLLOWING BUT IS NOT LIMITED TO UNLESS NOTED OTHERWISE: ELECTRICAL RACEWAYS AND DUCTS, WIRING TROUGHS, PULL BOXES, CONDUITS, CIRCUIT BREAKERS, EMERGENCY OFF BUTTONS, DOOR SWITCHES, WARNING LIGHTS, WIRING, WIRING DEVICES, CONNECTORS, LIGHTING EQUIPMENT AND GROUNDING.

5) RACEWAY AND CONDUIT NOTES: RACEWAY SHALL BE ELECTRIC METALLIC TUBING (EMT) FOR RIGID CONDUIT WORK, OR WHERE SHORT OFF-SET CONNECTIONS ARE REQUIRED LIQUIDTIGHT FLEXIBLE METAL CONDUIT SHALL BE USED. FIELD BENDS SHALL NOT BE LESS THAN AS SHOWN IN TABLE 346-10 OF THE NATIONAL ELECTRICAL CODE. PROVIDE A JETLINE "SUPER TRUE TAPE", OR EQUIVALENT CONDUIT MEASURING TAPE FISH LINE IN ALL RACEWAYS AND CONDUITS.

CONDUIT BODIES SHALL NOT BE USED. WHERE A CONDUIT ENTERS A BOX, FITTING, OR OTHER ENCLOSURE, AN INSULATED THROAT CONNECTOR SHALL BE PROVIDED TO PROTECT THE WIRE FROM ABRASION. CONNECTORS SHALL BE DOUBLE SET SCREW TYPE, STEEL CONCRETE TIGHT.

KEEP RACEWAYS AT LEAST 6 INCHES AWAY FROM PARALLEL RUNS OF FLUES OR STEAM AND HOT WATER PIPES. INSTALL RACEWAY RUNS ABOVE WATER AND STEAM PIPES PROVIDED THAT CABLE RUN DISTANCES ARE MAINTAINED. USE TEMPORARY CLOSURES TO PREVENT FOREIGN MATTER FROM ENTERING RACEWAY.

CONDUIT RUNS ARE SHOWN SCHEMATICALLY. INSTALL CONDUIT WITH A MINIMUM OF BENDS IN THE SHORTEST PRACTICAL DISTANCE CONSIDERING THE BUILDING CONSTRUCTION AND OBSTRUCTIONS, EXCEPT AS OTHERWISE INDICATED. THE CONTRACTOR SHALL MAKE CERTAIN THAT ANY CONDUIT/RACEWAY RUNS CONTAINING SIEMENS MEDICAL SYSTEMS CABLES DO NOT EXCEED THE SPECIFIED MAXIMUM DISTANCES AS SHOWN ON THE ELECTRICAL DETAILS.

PROVIDE ENCLOSED METAL RACEWAY SYSTEM (WIRE DUCT) WHERE SHOWN ON DRAWINGS WITH DIVIDERS TO SEPARATE THE DUCT (FOR POWER AND SIEMENS MEDICAL SOLUTIONS CABLING). DIVIDERS AND CROSSOVER PIECES TO BE PROVIDED AS NECESSARY. FOR UL CERTIFIED SYSTEMS, THE CABLE TO CABLE AS WELL AS THE CIRCUIT TO CIRCUIT SEPARATION REQUIREMENT WAS EVALUATED DURING THE UL SYSTEM INVESTIGATION OF THIS EQUIPMENT. ADDITIONAL SEPARATION OF THE SYSTEM CABLE ASSEMBLIES INTO SEPARATE OR PARTITIONED RACEWAYS, UNLESS OTHERWISE NOTED, IS NOT NECESSARY TO INSURE SEPARATION OF CIRCUITS, AS THEY CAN BE IN THE SAME RACEWAY.

PROVIDE WIRE DUCT/RACEWAY WITH ACCESSIBLE REMOVABLE COVERS. LOCATIONS OF OPENINGS TO BE CUT IN FIELD ARE TO BE COORDINATED WITH SIEMENS PROJECT MANAGER. ELECTRICAL PULL BOXES AND RACEWAY COVERS SHALL BE INSTALLED IN A MANNER TO ALLOW ACCESSIBILITY FOR INSTALLATION AND MAINTENANCE. IN-FLOOR TRENCH DUCT AND FLUSH FLOOR BOXES SHALL BE PROVIDED WITH FULLY GASKETED REMOVABLE COVERS.

6) WIRING: WIRING SHALL BE INSTALLED IN METAL RACEWAY, 600 VOLT CLASS, STRANDED TYPE THHN-THWN, SINGLE CONDUCTOR ANNEALED COPPER FOR A MAXIMUM OPERATING TEMPERATURE OF 75° C (165° F). SIZED AS INDICATED. THE CUSTOMER/CONTRACTOR SHALL LEAVE MINIMUM 10 FT. WIRE TAILS AT ALL OUTLET POINTS WITH WIRE IDENTIFICATION TAGGED AT BOTH ENDS FOR FINAL CONNECTION BY SIEMENS MEDICAL SOLUTIONS.

7) IN ADDITION TO THE CIRCUIT BREAKER LOAD CURRENT RATING, CONSIDERATION MUST ALSO BE GIVEN TO SELECTING CIRCUIT BREAKERS THAT HAVE A HIGH ENOUGH SHORT CIRCUIT CURRENT WITHSTAND RATING TO SAFELY COORDINATE WITH THE POWER SYSTEM AVAILABLE SHORT CIRCUIT CURRENT. GENERALLY, WHEN THE 480 VOLT, 3 PHASE, X-RAY EQUIPMENT IS SERVED FROM A POWER SUPPLY SYSTEM THAT IS PROVIDED WITH A 500 KVA OR SMALLER TRANSFORMER, A STANDARD 14,000 RMS AMPERE WITHSTAND RATED CIRCUIT BREAKER WILL BE ADEQUATE. HOWEVER, IF THE POWER SUPPLY SYSTEM TRANSFORMER IS LARGER THAN 500 KVA, THEN THE CIRCUIT BREAKERS HAVING A SHORT CIRCUIT WITHSTAND RATING GREATER THAN 14,000 RMS AMPERES MAY BE REQUIRED.

CONDUIT LENGTH CALCULATIONS

IF SITE-SPECIFIC CONDITIONS EXCEED THE FOLLOWING ASSUMED VALUES, THEN ADDITIONAL LENGTH MUST BE SUBTRACTED BY THE ELECTRICAL CONTRACTOR FROM THE MAXIMUM CONDUIT LENGTHS LISTED.

IF DUCT LOCATIONS ARE ALTERED FROM THE SHOWN LAYOUT, IT IS THE ELECTRICAL CONTRACTOR'S RESPONSIBILITY TO RECALCULATE THE MAXIMUM CONDUIT LENGTHS.

ASSUMED VALUES USED IN CALCULATING STATED MAXIMUM CONDUIT LENGTHS:
VERTICAL DUCTS – 12'-0"
FLOOR PENETRATIONS – 3'-0"

CEILING HEIGHT REQUIREMENT: 8 FT. - 11 IN.

ARTIS ZEE CEILING 08/07/12

PROJECT MANAGER: RICH DEISTER
TEL: (207) 712-3205
VMAIL: EXT:
FAX: (207) 929-3776
EMAIL: RICH.DEISTER@SIEMENS.COM

SIEMENS

MERCY HOSPITAL
144 STATE STREET, PORTLAND, ME 04101-3776
PROCEDURE ROOM – ARTIS ZEE CEILING

SYM	DATE	DESCRIPTION
0	08/17/12	R-101RA VERSION DATED 02/17/12 APPROVED BY CUSTOMER FOR FINALS

–ISSUE BLOCK–

PROJECT #: 1200537 — SHEET 5 OF 8 — DRAWN BY: J.PAOLUCCI — SCALE: AS NOTED — REF. #: 30158119 — DATE: 08/17/12 — CHECKED:

SHEET: E-101

ATTENTION:

NOTE: THIS DRAWING WAS NOT PREPARED BY SMRT. THE DRAWING IS PROVIDED FOR COORDINATION AND REFERENCE PURPOSES ONLY.

---

144 Fore Street/P.O. Box 618
Portland, Maine 04104
tel. (207) 772-3846
fax. (207) 772-1070
www.smrtinc.com

ARCHITECTURE
ENGINEERING
PLANNING
INTERIOR DESIGN
COMMISSIONING

SMRT

MAG NORTH — PROJECT NORTH

MERCY HOSPITAL
EQUIPMENT REPLACEMENT
PORTLAND, ME

CURRENT ISSUE STATUS: ISSUED FOR CONSTRUCTION 9-12-12

REV	DESCRIPTION	DATE
0	ISSUED FOR CONSTRUCTION	9-12-12

GRAPHIC SCALE: 0" — 1"

SCALE:	AS NOTED
PROJECT MANAGER:	KD
JC/DRAWN BY:	SIEMENS
A/E OF RECORD:	N/A
CAD FILE:	
PROJECT NO:	12076
DATE:	–

SHEET TITLE:
VENDOR EQUIPMENT DRAWINGS, SHEET 1

SHEET No. Q001

© COPYRIGHT 2009 SMRT INC.