INDOOR UNIT.

Halcyon HFI Hybrid Flex Inverter FUJITSU

Indor Unit		
Model		**ASU18RLF**
Power		208-230/VAC-1Ph-60Hz
Available Voltage Range		187-253VAC
Fan		
Type		Cross flow
Motor Output		64W
MCA		0.3A
Sound pressure level		
Cooling	Lo-Hi	28-43dB
Heating	Lo-Hi	28-44dB
Airlow rate		
Cooling	Lo-Hi	306-541 CFM
Heating	Lo-Hi	318-541CFM
Dimensions		H x W x D
Uncrated	(in)	12-5/8 x 39-1/4 x 9
	(mm)	(320 x 998 x 228)
Crated	(in)	12-3/5 x 42-15/16 x 16-7/8
	(mm)	(319 x 1090 x 429)
Weight		Indoor
Net		31lbs (8kg)
Gross Shipping		40lbs (10.5kg)

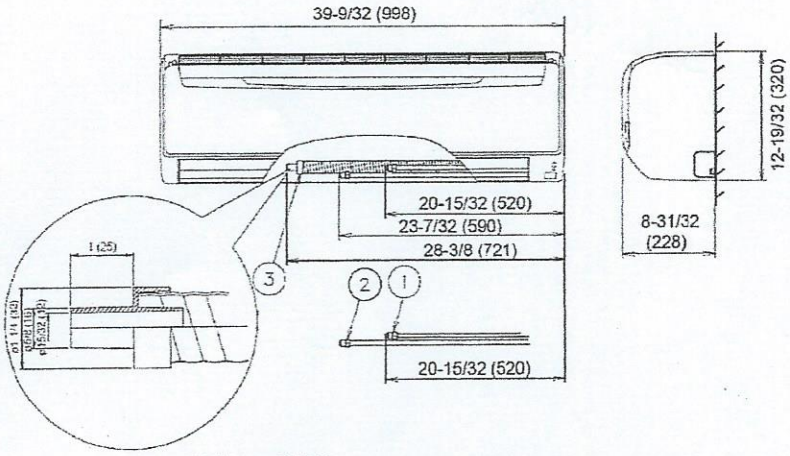

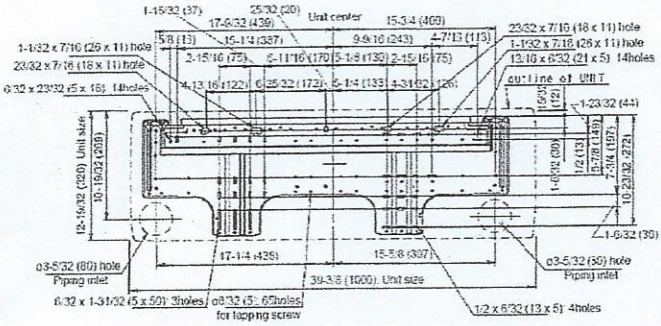

Fujitsu General America, Inc.
Fairfield, NJ 07004
Toll Free: 1-888-888-3424
Fax: (973) 836-0447
www.fujitsugeneral.com

Fujitsu products are subject to continuous improvements. Fujitsu reserves the right to modify product design, specifications and information in this data sheet without notice and without incuring any obligations.

7 Year Compressor 5 Year Parts WARRANTY