DOOR SCHEDULE

DOOR SCHEDULE ABBREVIATIONS

CLO.	CLOSER	FR	FIRE RATED	HM	HOLLOW METAL	P	DOOR PULL	S.C.	SOLID CORE HARDBOARD	UC	UNDERCUT
DSI	DOOR SILENCERS	FRG	FIRE PROTECTION RATED GLAZING	INS	INSULATED	PS	PASSAGE SET	S.H.	SPRING HINGE	WD	WOOD (SOLID)
D.S.	DOOR SWEEP	HO	HOLD OPEN ARM	K	KICKPLATE (PUSH SIDE)	P.H.	FIRE EXIT PANIC HARDWARE (NOTE 3)	S.J.	SPLIT JAMB (WOOD)	WG	WIRE GLASS
DST	DOOR STOP	HA	HANDICAP ACCESSIBLE	KL	KEY LOCK	P.P.	PUSH PLATE	TEMP	TEMPERED	WS	WEATHERSTRIPPING
EHO	ELECTRO. HOLD OPENER	HC	HOLLOW CORE HARDBOARD	LC	FULL HEIGHT LOCKING CHANNEL	PVS	PRIVACY SET	TL	THUMB LATCH	V	VIEWER
ES	ELECTRIC STRIKE	HDWE	HARDWARE	MTL.	METAL	S.	STEEL	THK	THICKNESS	VIF	VERIFY IN FIELD
F.J.P.	FINGER JOINTED PRIMED			NO	NUMBER	SPF	SPRUCE, PINE, FIR			VL	VENT LOUVER (Lower)

NOTES:

1. GC VERIFY EXISTING DOOR ROUGH OPENINGS AND EXISTING WOOD FRAME DIMENSIONS PRIOR TO ORDERING DOORS & FRAMES. CONFIRM SMOKE SEALS AT ALL 20 MINUTE AND 1 HOUR DOORS. SEAL ANY GAPS, TYP.

2. GC SHALL CONFIRM MASONRY OPENINGS IN FIELD PRIOR TO ORDERING EXTERIOR DOORS.

	DOORS											FRAME TYPES					THRESHOLD			
	MARK	ROOM	TYPE	SIZE	THK.	F.R.	HDWE SET	MAT.	GLASS SIZE	GLASS TYPE	REMARKS	TYPE	MAT.	F.R.	DETAILS HEAD	DETAILS JAMB	MAT.	DETAIL SILL	DETAIL HT.	REMARKS
FIRST FLOOR STORAGE	101	STORAGE	A	2'-8" x 7'-0"	–	–	LEVER	WOOD	–	–	HA, CLO, DSI, DS, DST, WS	AA	STEEL	–	–	–	OAK/ALUM		–	SELF CLOSING AND WEATHERSTRIPPED, NON-LOCKING FROM EGRESS SIDE. DOOR & JAMBS PAINTED DARK BROWN TO MATCH EXISTING TRIM COLOR SEE PHOTO ON DRAWING A3
	102	RESTROOM	B	2'-8" x 7'-0"	–	–	LEVER	WOOD	–	–	PVS, DSI, DST	BB	WOOD	–	–	–				

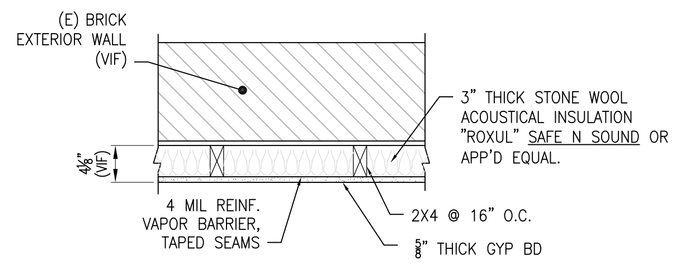

WALL TYPE – INTERIOR (1)
NON RATED

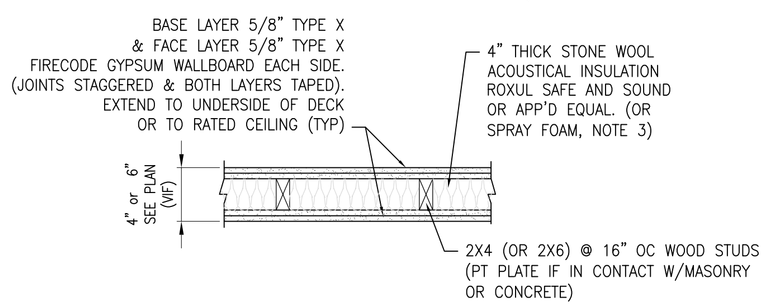

WALL TYPE –INTERIOR (2)
2HR FIRE RESISTANCE RATED
U.L DESIGN No. U301

2 LAYERS EACH SIDE
(Without (E)Lath/Plaster)

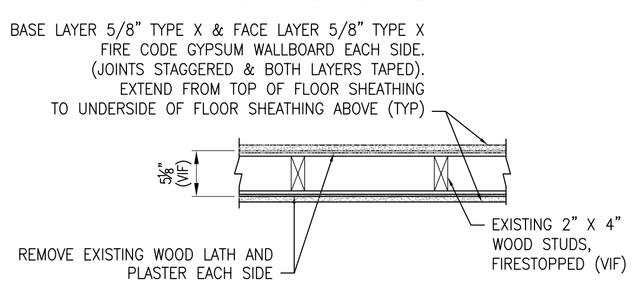

WALL TYPE – EXISTING INTERIOR (3)
EXISTING (VIF)
2HR FIRE RESISTANCE RATED
U.L DESIGN No. U301

WALL TYPES

NOTES:

1. EXTEND ALL FIRE RATED WALLS FROM FLOOR TO UNDERSIDE OF FLOOR/ROOF DECK. SEAL ALL PENETRATIONS, CRACKS & VOIDS WITH 2 HOUR FIRE SAFING. TYP.
2. GC VERIFY EXISTING WALL MATERIALS AND FINISHES
3. SPRAY FOAM INSULATION SHALL BE HIGH DENSITY CLOSED CELL TYPE WITH DENSITY OF NOMINAL 2.0 pcf CONFORMING TO ASTM C1029, Type I & II. INSTALL CLASS I VAPOR RETARDER IF NECESSARY TO MEET VAPOR PERMEANCE OF LESS THAN 0.1 PERM, TYP. APPLICATION SHALL BE BY QUALIFIED, EXPERIENCED CONTRACTOR.
4. EXISTING WOOD LATH AND PLASTER MAY BE RETAINED PROVIDED LATH IS MINIMUM ⅜" THICK PERFORATED OR PLAIN AND PLASTER IS MINIMUM ½" THICK. (THIS PROVIDES A 1 HOUR RATING). GC SHALL VERIFY THESE MINIMUMS IN FIELD TO RETAIN; AND THEN PROVIDE ADDITIONAL LAYER OF ⅝" THICK TYPE X FIRE CODE GYP BD OVER EXISTING LATH/PLASTER ON EACH SIDE TO ACHIEVE 2 HR FIRE RATING.

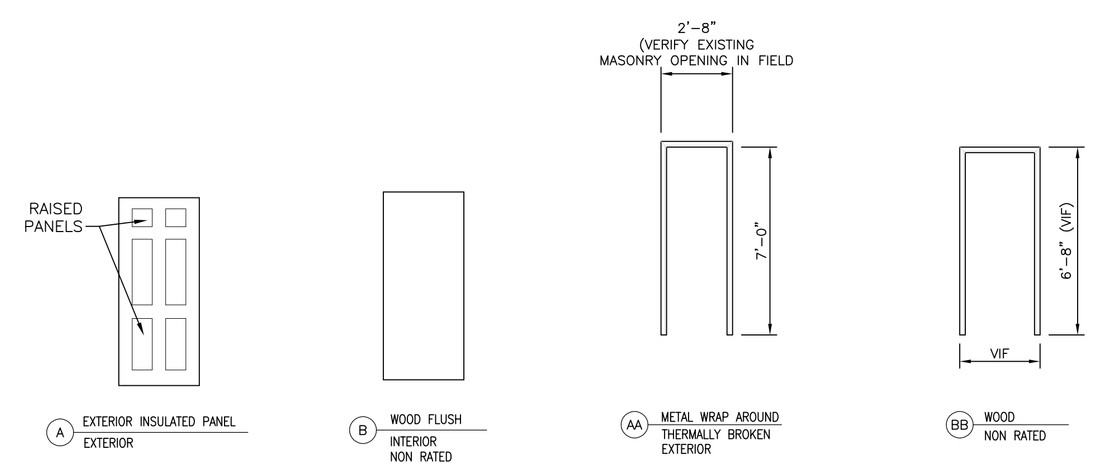

DOOR TYPES

FRAME TYPES

DOOR NOTES

1. SPECIFIC SELECTION OF DOOR TYPES, THICKNESS, VENEER, HINGES, LEVER HANDLES, CLOSERS, PANIC BARS, GLASS LITES, TRIM AND OTHER RELATED DOOR HARDWARE BY OWNER/G.C., TYP)
2. ALL DOORS SHALL BE EQUIPPED WITH LEVER TYPE HANDLES (UON) AND SHALL BE ADA COMPLIANT. OPERABLE PARTS SHALL BE 34" MIN. TO 48" MAX. ABOVE FINISHED FLOOR AND OPERATE WITH ONE HAND AND SHALL NOT REQUIRE TIGHT GRASPING, PINCHING, OR TWISTING OF THE WRIST. THE FORCE REQUIRED TO ACTIVATE OPERABLE PARTS SHALL BE 5 POUNDS (22.2N) MAXIMUM.
   a) DOOR CLOSERS SHALL BE ADJUSTED SO THAT FROM AN OPEN POSITION OF 90 DEGREES, THE TIME REQUIRED TO MOVE THE DOOR TO A POSITION OF 12 DEGREES FROM THE LATCH IS 5 SECONDS, MINIMUM.
   SPRING HINGES, IF SELECTED, SHALL BE MOUNTED ON ALL THREE DOOR HINGE LOCATIONS, TYP.
3. FIRE EXIT PANIC HARDWARE SHALL CONSIST OF LISTED FIRE LABEL WITH LATCHING MECHANISM ON LABELED FIRE RATED DOORS. REQUIRED FIRE EXIT HARDWARE SHALL NOT BE EQUIPPED WITH ANY LOCKING DEVICE, SET SCREW, OR OTHER ARRANGEMENT THAT PREVENTS THE RELEASE OF THE LATCH WHEN PRESSURE IS APPLIED TO THE RELEASING DEVICE.
4. G.C SHALL VERIFY EXISTING EGRESS DOORS AND FRAMES OPENINGS – VERIFY TYPES, SIZES, THRESHOLDS ACCEPTABLE WORKING ORDER AND HARDWARE AS INDICATED IN THIS SCHEDULE (NOTIFY ARCHITECT/ENGINEER OF ANY DEFICIENCIES, UPGRADES NEEDED)
5. CONTRACTOR SHALL SUBMIT DOOR AND HARDWARE SHOP DRAWINGS FOR APPROVAL PRIOR TO ORDERING OR INSTALLATION.
6. REFER TO NOTES ON DRAWING A1 FOR 20 MINUTE & 1 HOUR FIRE RATED DOORS
7. CONTRACTOR VERIFY ALL DIMENSIONS AND EXISTING STAIRS, DOOR ROUGH OPENINGS AND WALL LOCATIONS IN FIELD. TYP.

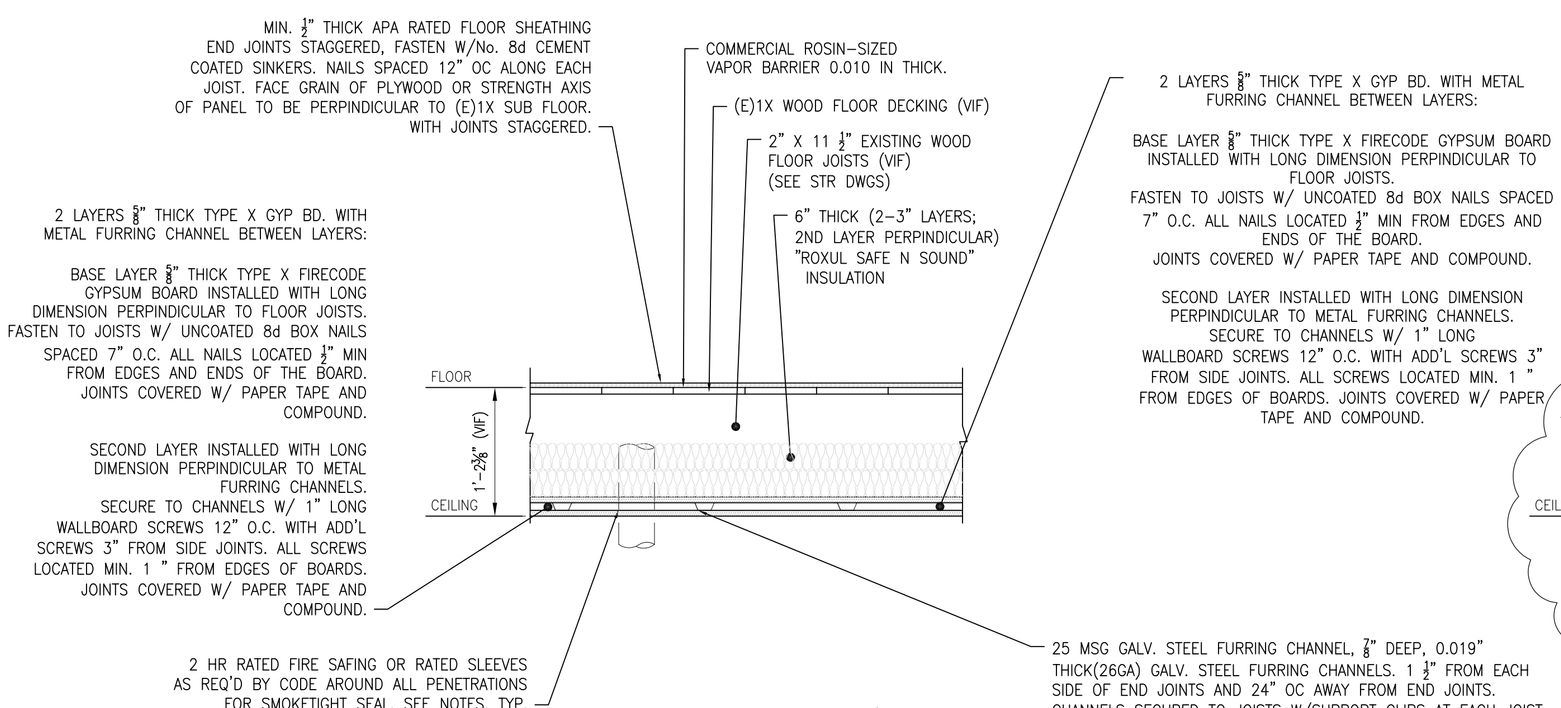

FLOOR/CEILING ASSEMBLY (C)
UL DESIGN No. L505 (System No. 1)
(2 HOUR UNRESTRAINED ASSEMBLY RATING)

GC VERIFY EXISTING EQUIPMENT, PIPING, STRUCTURE OR OTHER INTERFERENCES. NOTIFY ARCHITECT OF ANY DICREPANCIES PRIOR TO INSTALLATION.

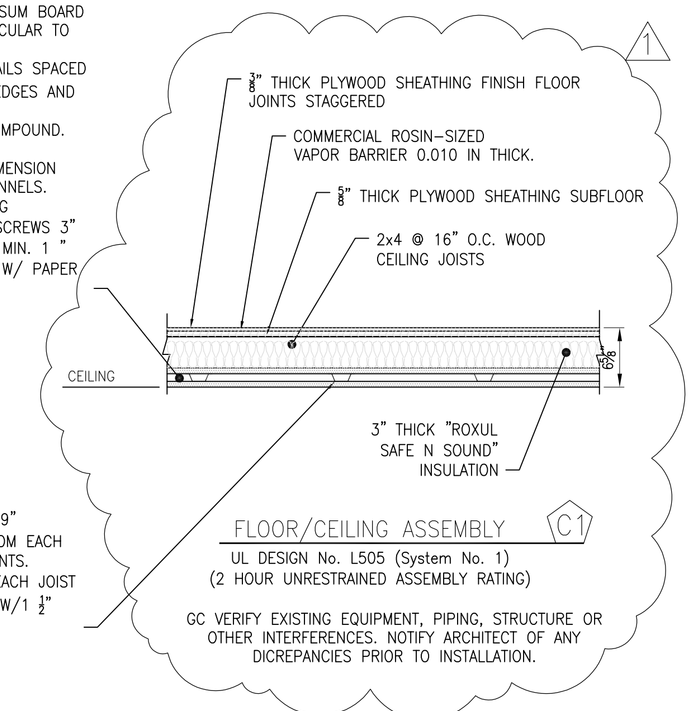

FLOOR/CEILING ASSEMBLY (C1)
UL DESIGN No. L505 (System No. 1)
(2 HOUR UNRESTRAINED ASSEMBLY RATING)

GC VERIFY EXISTING EQUIPMENT, PIPING, STRUCTURE OR OTHER INTERFERENCES. NOTIFY ARCHITECT OF ANY DICREPANCIES PRIOR TO INSTALLATION.

CEILING TYPES

REGISTERED ARCHITECT JOHN H. LEASURE No. 310 STATE OF MAINE

STATUS		
REV.	DATE	
0	9-21-17	PERMIT SUBMISSION
1	10-25-17	REVISED

JOHN H. LEASURE ARCHITECT, INC.
6 Q STREET
SOUTH PORTLAND, MAINE 04106

PROPOSED STORAGE ROOM
658 CONGRESS STREET
PORTLAND, MAINE

DOOR SCHEDULE, WALL & CEILING TYPES

A5